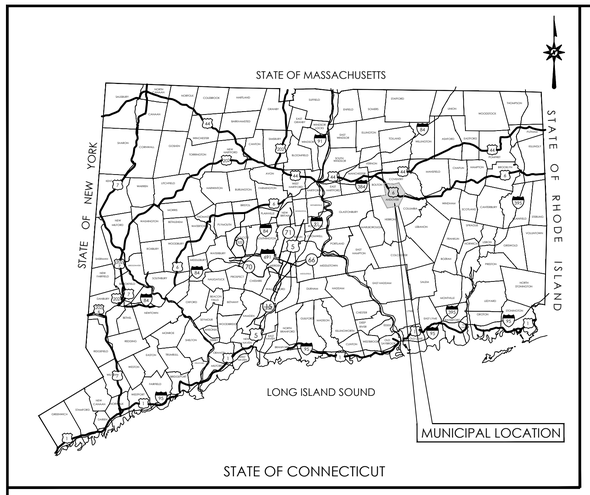

LOCATION MAP

N.T.S.

LAND DEVELOPMENT PLANS
ISSUED FOR PERMITTING

PROPOSED RETAIL DEVELOPMENT
580 LAKE ROAD
ANDOVER, CONNECTICUT

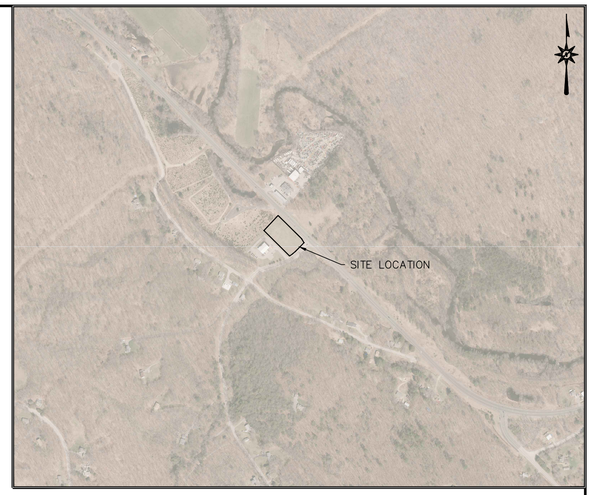

VICINITY MAP

SCALE: 1"=600'

PREPARED FOR:

GARRETT HOMES, LLC
59 FIELD STREET
TORRINGTON, CT 06790

CONTENTS

	TITLE SHEET
AL-1	ALTA/ACSM LAND TITLE SURVEY (SHEET 1 OF 2)
AL-1	ALTA/ACSM LAND TITLE SURVEY (SHEET 2 OF 2)
GN-1	GENERAL NOTES
OP-1	OVERALL SITE PLAN
DM-1	DEMOLITION PLAN
SP-1	SITE PLAN
TT-1	TRUCK TURN PLAN (WB-67)
GD-1	GRADING AND DRAINAGE PLAN
SU-1	SITE UTILITIES PLAN
SS-1 TO SS-2	SEPTIC SYSTEM DETAILS
EC-1	SEDIMENT AND EROSION CONTROL PLAN
EC-2	SEDIMENT AND EROSION CONTROL NOTES
LL-1	LANDSCAPE PLAN
LL-2	LANDSCAPE NOTES AND DETAILS
DN-1 TO DN-9	DETAILS SHEET
	LIGHTING PLAN (BY OTHERS)

CAD FILE: CV210172601
XREF(S): XXXXXXXX

PREPARED BY:

BL Companies
ARCHITECTURE
ENGINEERING
ENVIRONMENTAL
LAND SURVEYING

100 CONSTITUTION PLAZA, 10TH FLOOR
HARTFORD, CONNECTICUT 06103
(860) 249-2200
(860) 249-2400 Fax

FOR PERMITTING PURPOSES ONLY
NOT RELEASED FOR CONSTRUCTION

DEVELOPER:

GARRETT HOMES, LLC
59 FIELD STREET
TORRINGTON, CT 06790
(860) 307-5479

OWNER:

LAKE ROAD, LLC
30 BRIAN DRIVE
BOLTON, CT 06043

SUBCONSULTANTS:

STONES RIVER ELECTRIC - LIGHTING PLAN

STATE OF CONNECTICUT
TIMOTHY P. HAYES
No. 19,292
LICENSED
PROFESSIONAL ENGINEER

DATES

ISSUE DATE: NOVEMBER 18, 2021
REVISION: DECEMBER 10, 2021 (REV PER HEALTH DEPARTMENT COMMENTS)

© 2021 BL COMPANIES, INC. THESE DRAWINGS SHALL NOT BE UTILIZED BY ANY PERSON, FIRM OR CORPORATION WITHOUT THE SPECIFIC WRITTEN PERMISSION OF BL COMPANIES.

LOCATION MAP

NOT TO SCALE

SCHEDULE B, SECTION II:

TITLE COMMITMENT REFERENCE NUMBER	RECORDING REFERENCE	DESCRIPTION	STATUS ON PLAT
8	V 71 PG 753	EASEMENTS AND RIGHTS AS SET FORTH IN WARRANTY DEED FROM WILLIAM S. MERRITT TO THE STATE OF CONNECTICUT.	PLOTTED
9	MAP 901-A	THOSE MATTERS AS SHOWN ON MAP.	PLOTTED

REFERENCE: FIRST AMERICAN TITLE INSURANCE COMPANY, COMMITMENT NO. CT5548665, COMMITMENT DATE: AUGUST 24, 2021.

RECORD LEGAL DESCRIPTION

ALL THAT CERTAIN PIECE OR PARCEL OF LAND LOCATED ON THE SOUTHWESTERLY SIDE OF JONATHAN TRUMBULL HIGHWAY (U.S. ROUTE 6) IN THE TOWN OF ANDOVER, COUNTY OF TOLLAND, AND THE STATE OF CONNECTICUT, SHOWN ON A MAP ENTITLED "PROPERTY SURVEY PREPARED FOR PROTECH SERVICES JONATHAN TRUMBULL HIGHWAY (U.S. ROUTE 6) & LAKE ROAD ANDOVER, CONNECTICUT DATE: 8/15/2001 SCALE 1"=30' SHEET 2 OF 5 DWG. NO. 01C-01-01 DRAWN: AMR CHK BY. CG JOB NO. 013091 FIELD BOOK: 360 REVISIONS 10/1/2001 TOWN COMMENTS 12/18/01 PROVOST ROVERO FITZBACK ARCHITECTURE ENGINEERING SURVEYING 57 EAST MAIN STREET, P.O. BOX 191 PLAINFIELD, CONNECTICUT (860) 230-0856 – FAX (860) 230-0880" BEING MORE PARTICULARLY BOUNDED AND DESCRIBED AS FOLLOWS:

BEGINNING AT AN IRON PIN IN THE SOUTHWESTERLY LINE OF JONATHAN TRUMBULL HIGHWAY MARKING THE INTERSECTION OF PROPERTY NOW OR FORMERLY OF ROBERT C. RUSSELL; THENCE RUNNING S 45 DEGREES 09' 55" E A DISTANCE OF 279.51 FEET ALONG TRUMBULL HIGHWAY TO A CHD PT; THENCE RUNNING S 29 DEGREES 53' 14" E A DISTANCE OF 36.94 FEET ALONG TRUMBULL HIGHWAY TO AN IRON PIN; THENCE RUNNING S 44 DEGREES 48' 39" W A DISTANCE OF 101.10 FEET ALONG LAKE ROAD TO A POINT; THENCE RUNNING ALONG A CURVE DEFLECTING TO THE RIGHT WITH A RADIUS OF 328.08 FEET AND A DELTA OF 25 DEGREES 14' 32" A DISTANCE 144.54 FEET ALONG LAKE ROAD TO A POINT; THENCE RUNNING S 72 DEGREES 10' 03" W A DISTANCE OF 149.92 FEET ALONG LAKE ROAD TO AN IRON PIN MARKING THE INTERSECTION OF LAND NOW OR FORMERLY OF THE STATE OF CONNECTICUT; THENCE RUNNING N 65 DEGREES 38' 18" W A DISTANCE OF 174.41 FEET ALONG SAID STATE OF CONNECTICUT LAND TO A POINT; THENCE RUNNING ALONG A CURVE DEFLECTING TO THE RIGHT WITH A RADIUS OF 1,508.50 FEET AND A DELTA OF 01 DEGREES 29' 51" A DISTANCE OF 39.43 FEET ALONG SAID STATE OF CONNECTICUT LAND TO AN IRON PIN MARKING THE INTERSECTION OF LAND NOW OR FORMERLY OF ROBERT C. RUSSELL; THENCE RUNNING N 43 DEGREES 19' 58" E A DISTANCE OF 457.81 FEET ALONG SAID RUSSELL LAND TO THE PLACE AND POINT OF BEGINNING. CONTAINING 2.654 ACRES.

GENERAL NOTES

1. A) THIS MAP HAS BEEN PREPARED IN ACCORDANCE WITH THE REGULATIONS OF CONNECTICUT STATE AGENCIES, SECTIONS 20–300b–1 THROUGH 20–300b–20 AND THE "STANDARDS AND SUGGESTED METHODS AND PROCEDURES FOR SURVEYS AND MAPS IN THE STATE OF CONNECTICUT" PREPARED AND ADOPTED BY THE CONNECTICUT ASSOCIATION OF LAND SURVEYORS, INC. AUGUST 29, 2019.

   B) THIS PLAN CONFORMS TO HORIZONTAL ACCURACY CLASS A–2 AND TOPOGRAPHIC ACCURACY CLASS T–2.

   C) BOUNDARY DETERMINATION IS BASED UPON A RESURVEY.

   D) THE TYPE OF SURVEY PERFORMED IS A PROPERTY/TOPOGRAPHIC SURVEY AND IS INTENDED TO DEPICT THE EXISTING CONDITIONS WITH RESPECT TO MONUMENTATION FOUND, STRUCTURES, EASEMENTS, ENCROACHMENTS, VISIBLE UTILITIES, ROADWAYS AND CONTOURS.

2. NORTH ARROW AND BEARINGS REFER TO THE CONNECTICUT STATE PLANE COORDINATE SYSTEM (CT NAD 83 – EPOCH 2011) AND ARE BASED ON GPS OBSERVATIONS PERFORMED BY BL COMPANIES DURING OCTOBER 2021 REFERENCED TO THE C.O.R.S. NETWORK BASE STATION "CTMA" LOCATED IN MANSFIELD, CT HAVING THE FOLLOWING PUBLISHED VALUES:
   STATION: CTMA (DH5835)
   COORDINATES (US FT): N:827673.84, E:1147177.58
   ELLIPSOID HEIGHT (US FT): 180.99 (55.165m)

3. ELEVATIONS REFER TO THE NORTH AMERICAN DATUM OF 1988 (NAVD 88). THE DATUM WAS DETERMINED BY USING (GEOID 18) AND IS BASED ON GPS OBSERVATIONS PERFORMED BY BL COMPANIES IN OCTOBER 2021 AND REFERENCED TO C.O.R.S. BASE STATION "CTMA" LOCATED IN MANSFIELD, CT HAVING THE PUBLISHED COORDINATE AND ELEVATION VALUES AS DESCRIBED IN NOTE 2 ABOVE.

4. PARCEL IS LOCATED IN A FLOOD AREA "B", (AREAS BETWEEN LIMITS OF THE 100–YEAR FLOOD AND 500–YEAR FLOOD), AND FLOOD AREA "C", (AREAS OF MINIMAL FLOODING), AS DEPICTED ON F.I.R.M. COMMUNITY PANEL NO. 0901610004A PANEL 4 OF 10 EFFECTIVE DATE: FEBRUARY 3, 1982.

5. THE UNDERGROUND UTILITIES DEPICTED HAVE BEEN PLOTTED FROM FIELD SURVEY INFORMATION AND EXISTING DRAWINGS. THE SURVEYOR MAKES NO GUARANTEES THAT THE UNDERGROUND UTILITIES DEPICTED COMPRISE ALL SUCH UTILITIES IN THE AREA, EITHER IN SERVICE OR ABANDONED. THE SURVEYOR FURTHER DOES NOT WARRANT THAT THE UNDERGROUND UTILITIES DEPICTED ARE IN THE EXACT LOCATION INDICATED THOUGH THEY ARE PLOTTED AS ACCURATELY AS POSSIBLE FROM INFORMATION AVAILABLE. THE SURVEYOR HAS NOT PHYSICALLY EXPOSED THE UNDERGROUND UTILITIES. PER CONNECTICUT STATE LAW THE CONTRACTOR SHALL CONFIRM THE LOCATION OF ALL UTILITIES PRIOR TO THE COMMENCEMENT OF EXCAVATION. CALL BEFORE YOU DIG 1–800–922–4455.

6. NO ZONING REPORT WAS PROVIDED TO THE SURVEYOR AT THE TIME OF THE SURVEY.

MAP REFERENCES

A. "CONNECTICUT STATE HIGHWAY DEPARTMENT RIGHT OF WAY MAP TOWN OF ANDOVER, ANDOVER–WILLIMANTIC ROAD FROM THE HEBRON RD. SOUTHEASTERLY & EASTERLY TO THE COLUMBIA T. LINE. ROUTE U.S. 6–A.", SCALE 1"=40', DATE FEB. 29, 1940, NUMBER 1–04, SHEET NO. 2 & 3 OF 5.

B. "RIGHT OF WAY SURVEY, TOWN OF ANDOVER MAP SHOWING LAND ACQUIRED FROM WILLIAM S. MERRITT BY THE STATE OF CONNECTICUT DEPARTMENT OF TRANSPORTATION SAFETY IMPROVEMENTS ON U.S. ROUTE 6 FROM BUNKER HILL ROAD TO LINDHOLM'S CORNER FEBRUARY 1998", SCALE 1METER = 3.28080000 U.S. SURVEY FEET, DATE 11/16/98, REVISED 5–20–98, NUMBER 01–99–2, SHEET 1 & 2 OF 2.

C. "PROPERTY SURVEY PREPARED FOR PROTECH SERVICES, JONATHAN TRUMBULL HIGHWAY (U.S. RTE. 6) & LAKE ROAD, ANDOVER, CONNECTICUT", SCALE: 1'=30', DATE: 8/15/2001, REVISED 10/1/2001, BY PROVOST ROVERO FITZBACK, PLAINFIELD, CONNECTICUT AND FILED AS MAP 901–A.

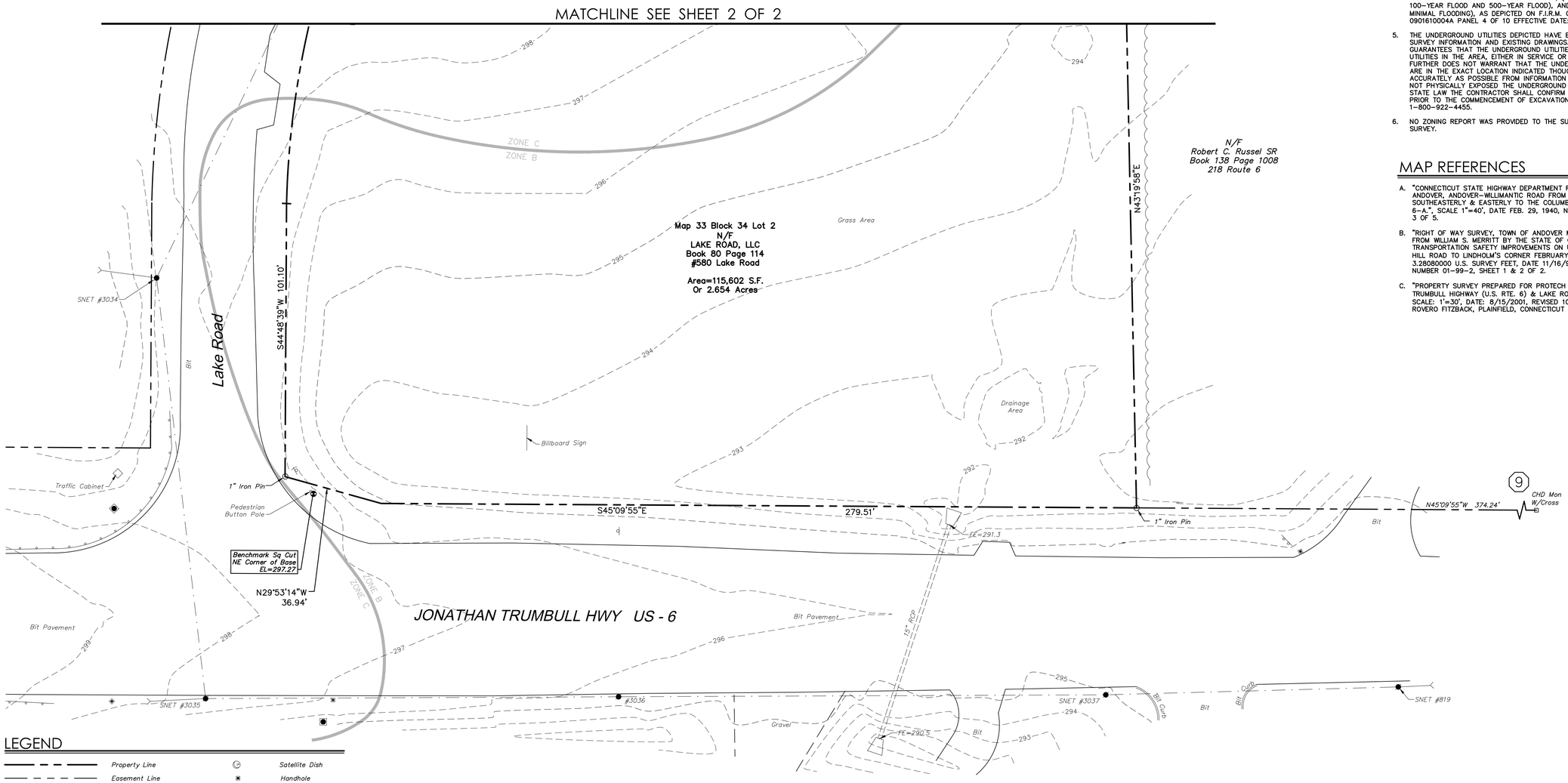

LEGEND

Property Line	Satellite Dish
Easement Line	Handhole
Treeline	Utility Pole
Major Contour	Guy Wire
Minor Contour	Span Pole
Guide Rail	Water Well
Fence	Sign
Overhead Wires	Bollard
Storm Sewer	Handicap Symbol
	Mail Box
	Deciduous Tree
	Coniferous Tree

GRAPHIC SCALE
20 10 0 20
SCALE IN FEET

SURVEY CERTIFICATION

TO; LAKE ROAD, LLC; FIRST AMERICAN TITLE INSURANCE COMPANY; :

THIS IS TO CERTIFY THAT THIS MAP OR PLAT AND THE SURVEY ON WHICH IT IS BASED WERE MADE IN ACCORDANCE WITH THE 2021 MINIMUM STANDARD DETAIL REQUIREMENTS FOR ALTA/NSPS LAND TITLE SURVEYS, JOINTLY ESTABLISHED AND ADOPTED BY ALTA AND NSPS, AND INCLUDES ITEMS 2–5,6(a),7(a),7(b)(1),7(c),8,9,11(a),13,14,16–18 AND 19 OF TABLE A THEREOF. THE FIELD WORK WAS COMPLETED ON OCTOBER 12, 2021.

STATE OF CONNECTICUT PATRICK J. CORLESS, JR. No. 70015 LICENSED LAND SURVEYOR

DATED: 11/16/2021 SIGNED: _____
PATRICK J. CORLESS, JR., L.S. #70015

Architecture
Engineering
Environmental
Land Surveying

BL Companies

355 Research Parkway
Meriden, CT 06450
(203) 630-1406
(203) 630-2615 Fax

LAND OF
LAKE ROAD, LLC
580 LAKE ROAD
ANDOVER, CONNECTICUT

REVISIONS

No.	Date	Desc.

Surveyed	NS
Drawn	KS
Reviewed	PJC
Scale	1"=20'
Project No.	2101726
Date	10/18/2021
Field Book	563
CAD File:	AL210172601

Title
ALTA/NSPS
LAND TITLE
SURVEY

Sheet No. 1 Of 2

AL-1

Xref (s): XY210172601

Nov 16, 2021 10:40am pcorless \\blcompanies.com\dfs\proj\JOB821\16\2101726\DWG\AL210172601.dwg
Layout: AL1 24X36 ESC 1:20

© 2021 BL COMPANIES, INC. THESE DRAWINGS SHALL NOT BE UTILIZED BY ANY PERSON, FIRM OR CORPORATION WITHOUT THE SPECIFIC WRITTEN PERMISSION OF BL COMPANIES.

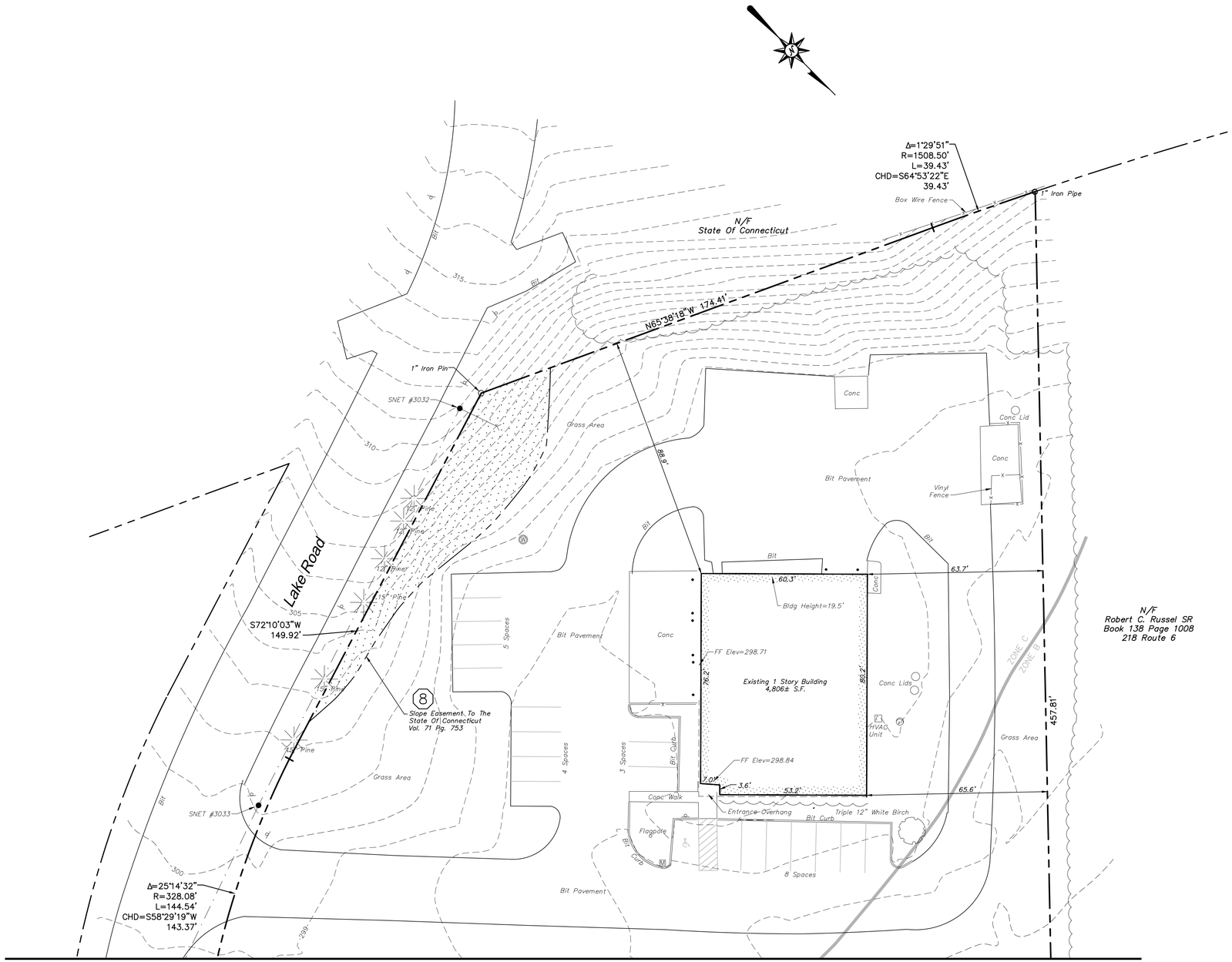

MATCHLINE SEE SHEET 1 OF 2

LEGEND

	Property Line		Satellite Dish
	Easement Line		Handhole
	Treeline		Utility Pole
50	Major Contour		Guy Wire
	Minor Contour		Span Pole
	Guide Rail	W	Water Well
x x	Fence		Sign
	Overhead Wires		Bollard
	Storm Sewer		Handicap Symbol
		M	Mail Box
			Deciduous Tree
			Coniferous Tree

GRAPHIC SCALE
20 10 0 20
SCALE IN FEET

Architecture
Engineering
Environmental
Land Surveying

BL Companies

355 Research Parkway
Meriden, CT 06450
(203) 630-1406
(203) 630-2615 Fax

LAND OF
LAKE ROAD, LLC
580 LAKE ROAD
ANDOVER, CONNECTICUT

REVISIONS

No.	Date	Desc.

Surveyed	NS
Drawn	KS
Reviewed	PJC
Scale	1"=20'
Project No.	2101726
Date	10/18/2021
Field Book	563
CAD File:	AL210172601

Title

ALTA/NSPS
LAND TITLE
SURVEY

Sheet No. 2 Of 2

AL-1

Xref (s): _XY210172601

Nov 16, 2021 10:40am pcorless \\blcompanies.com\dfs\proj\LOB821\16\210172\DWG\AL210172601.dwg
Layout: AL-1 24x36-2ref-2XP

© 2021 BL COMPANIES, INC. THESE DRAWINGS SHALL NOT BE UTILIZED BY ANY PERSON, FIRM OR CORPORATION WITHOUT THE SPECIFIC WRITTEN PERMISSION OF BL COMPANIES.

SITE WORK GENERAL NOTES

1. THESE PLANS ARE FOR PERMITTING PURPOSES ONLY AND ARE NOT FOR CONSTRUCTION.

2. ALL CONSTRUCTION SHALL COMPLY WITH THE PROJECT SPECIFICATION MANUAL; CLIENT CORPORATION STANDARDS, MUNICIPAL STANDARDS AND SPECIFICATIONS, CONNECTICUT DEPARTMENT OF TRANSPORTATION STANDARDS AND SPECIFICATIONS, 2010 ADA STANDARDS, AND STATE BUILDING CODE IN THE ABOVE REFERENCED INCREASING HIERARCHY. IF SPECIFICATIONS ARE IN CONFLICT, THE MORE STRINGENT SPECIFICATION SHALL APPLY. ALL CONSTRUCTION SHALL BE PERFORMED IN ACCORDANCE WITH ALL APPLICABLE OSHA, FEDERAL, STATE AND LOCAL REGULATIONS.

3. REFER TO OTHER PLANS BY OTHER DISCIPLINES, DETAILS AND PROJECT MANUAL FOR ADDITIONAL INFORMATION. THE CONTRACTOR SHALL VERIFY ALL SITE AND BUILDING CONDITIONS IN THE FIELD AND CONTACT THE CIVIL ENGINEER AND ARCHITECT IF THERE ARE ANY QUESTIONS OR CONFLICTS REGARDING THE CONSTRUCTION DOCUMENTS AND/OR FIELD CONDITIONS, SO THAT APPROPRIATE REVISIONS CAN BE MADE PRIOR TO BIDDING. ANY CONFLICT BETWEEN THE DRAWINGS AND SPECIFICATIONS SHALL BE CONFIRMED WITH THE OWNER'S CONSTRUCTION MANAGER PRIOR TO BIDDING.

4. DO NOT INTERRUPT EXISTING UTILITIES SERVICING FACILITIES OCCUPIED AND USED BY THE OWNER OR OTHERS DURING OCCUPIED HOURS EXCEPT WHEN SUCH INTERRUPTIONS HAVE BEEN AUTHORIZED IN WRITING BY THE OWNER AND THE LOCAL MUNICIPALITIES. INTERRUPTIONS SHALL ONLY OCCUR AFTER ACCEPTABLE TEMPORARY SERVICE HAS BEEN PROVIDED.

5. THE CONTRACTOR SHALL ABIDE BY ALL OSHA, FEDERAL, STATE, AND LOCAL REGULATIONS WHEN OPERATING CRANES, BOOMS, HOISTS, ETC. IN CLOSE PROXIMITY TO OVERHEAD ELECTRIC LINES. IF CONTRACTOR MUST OPERATE EQUIPMENT CLOSE TO ELECTRIC LINES, CONTACT POWER COMPANY TO MAKE ARRANGEMENTS FOR PROPER SAFEGUARDS. ANY UTILITY COMPANY FEES SHALL BE PAID FOR BY THE CONTRACTOR.

6. THE CONTRACTOR SHALL PROVIDE AS-BUILT RECORD DRAWINGS OF ALL CONSTRUCTION (INCLUDING UNDERGROUND UTILITIES AND STORMWATER SYSTEM) TO THE OWNER AT THE END OF CONSTRUCTION.

7. THE ARCHITECT OR ENGINEER IS NOT RESPONSIBLE FOR SITE SAFETY MEASURES TO BE EMPLOYED DURING CONSTRUCTION. THE ARCHITECT AND ENGINEER HAVE NO CONTRACTUAL DUTY TO CONTROL THE SAFEST METHODS OR MEANS OF THE WORK, JOB SITE RESPONSIBILITIES, SUPERVISION OR TO SUPERVISE SAFETY AND DOES NOT VOLUNTARILY ASSUME ANY SUCH DUTY OR RESPONSIBILITY.

8. THE CONTRACTOR SHALL COMPLY WITH CFR 29 PART 1926 FOR EXCAVATION, TRENCHING, AND TRENCH PROTECTION REQUIREMENTS.

9. INFORMATION ON EXISTING UTILITIES AND STORM DRAINAGE SYSTEMS HAS BEEN COMPILED FROM AVAILABLE INFORMATION INCLUDING UTILITY COMPANY AND MUNICIPAL OR COUNTY OR STATE RECORD MAPS AND/OR FIELD SURVEY AND IS NOT GUARANTEED CORRECT OR COMPLETE. UTILITIES AND STORM DRAINAGE SYSTEMS ARE SHOWN TO ALERT THE CONTRACTOR TO THEIR PRESENCE AND THE CONTRACTOR IS SOLELY RESPONSIBLE FOR DETERMINING ACTUAL LOCATIONS AND ELEVATIONS OF ALL UNDERGROUND AND OVERHEAD UTILITIES AND STORM DRAINAGE SYSTEMS INCLUDING SERVICES. PRIOR TO DEMOLITION OR CONSTRUCTION, THE CONTRACTOR SHALL CONTACT CT CALL BEFORE YOU DIG (CBYD) 72 HOURS BEFORE COMMENCEMENT OF WORK AT (800) 922-4455 OR AT 811 AND VERIFY ALL UTILITY AND STORM DRAINAGE SYSTEM LOCATIONS. THE CONTRACTOR SHALL EMPLOY THE USE OF A UTILITY LOCATING COMPANY TO PROVIDE SUBSURFACE UTILITY ENGINEERING CONSISTING OF DESIGNATING UTILITIES AND STORM PIPING ON PRIVATE PROPERTY WITHIN THE CONTRACT LIMIT AND CONSISTING OF DESIGNATING AND LOCATING WHERE PROPOSED UTILITIES AND STORM PIPING CROSS EXISTING UTILITIES AND STORM PIPING WITHIN THE CONTRACT LIMITS.

10. DO NOT SCALE DRAWINGS. DIMENSIONS GOVERN OVER SCALED DIMENSIONS.

11. SHOULD CONFLICTING INFORMATION BE FOUND WITHIN THE CONTRACT DOCUMENTS, IT IS INCUMBENT UPON THE CONTRACTOR TO REQUEST CLARIFICATION PRIOR TO PROCEEDING WITH THE WORK. FOR BUDGETING PURPOSES, THE CONTRACTOR SHALL CARRY THE COST OF THE HIGHER QUALITY/QUANTITY OF WORK UNTIL SUCH TIME THAT A CLARIFICATION IS RENDERED.

12. ALL CONTRACTORS AND SUBCONTRACTORS SHALL OBTAIN COMPLETE DRAWING PLAN SETS FOR BIDDING AND CONSTRUCTION. PLAN SETS OR PLAN SET ELECTRONIC POSTINGS SHALL NOT BE DISASSEMBLED INTO PARTIAL PLAN SETS FOR USE BY CONTRACTORS AND SUBCONTRACTORS OF INDIVIDUAL TRADES. IT SHALL BE THE CONTRACTOR'S AND SUBCONTRACTOR'S RESPONSIBILITY TO OBTAIN COMPLETE PLAN SETS OR COMPLETE PLAN SET ELECTRONIC POSTINGS FOR USE IN BIDDING AND CONSTRUCTION.

13. ALL NOTES AND DIMENSION DESIGNATED AS "TYPICAL" OR "TYP." APPLY TO ALL LIKE OR SIMILAR CONDITIONS THROUGHOUT THE PROJECT.

14. CONTRACTOR(S) TO TAKE AND VERIFY ALL DIMENSIONS AND CONDITIONS OF THE WORK AND BE RESPONSIBLE FOR COORDINATION OF SAME. FIELD VERIFY ALL EXISTING CONDITIONS PRIOR TO START OF WORK.

15. BL COMPANIES WILL PREPARE FINAL CONSTRUCTION DOCUMENTS SUITABLE FOR BIDDING AND CONSTRUCTION. PROGRESS SETS OF THESE DOCUMENTS ARE NOT SUITABLE FOR THOSE PURPOSES. IF CLIENT ELECTS TO SOLICIT BIDS OR ENTER INTO CONSTRUCTION CONTRACTS UTILIZING CONSTRUCTION DOCUMENTS THAT ARE NOT YET FINAL, CONSULTANT SHALL NOT BE RESPONSIBLE FOR ANY COSTS OR DELAY ARISING AS A RESULT.

16. NO CONSTRUCTION OR DEMOLITION SHALL BEGIN UNTIL APPROVAL OF THE FINAL PLANS IS GRANTED BY ALL GOVERNING AND REGULATORY AGENCIES.

17. THE OWNER IS RESPONSIBLE FOR OBTAINING ALL NECESSARY ZONING PERMITS REQUIRED BY GOVERNMENT AGENCIES PRIOR TO CONSTRUCTION. THE CONTRACTOR SHALL CONTACT AND OBTAIN FROM MUNICIPAL SOURCES ALL CONSTRUCTION PERMITS, INCLUDING ANY STATE DOT PERMITS, SEWER AND WATER CONNECTION PERMITS, AND ROADWAY CONSTRUCTION PERMITS. THE CONTRACTOR SHALL POST ALL BONDS, PAY ALL FEES, PROVIDE PROOF OF INSURANCE AND PROVIDE TRAFFIC CONTROL NECESSARY FOR THIS WORK EXCEPT CTDOT ENCROACHMENT PERMIT BOND.

18. THE CONTRACTOR SHALL SUBMIT SHOP DRAWINGS OF ALL PRODUCTS AND MATERIALS PER PLANS AND SPECIFICATIONS TO THE OWNER AND CIVIL ENGINEER FOR REVIEW AND APPROVAL PRIOR TO FABRICATION OR DELIVERY TO THE SITE. ALLOW A MINIMUM OF 14 WORKING DAYS FOR REVIEW.

19. THE CONTRACTOR SHALL FOLLOW THE SEQUENCE OF CONSTRUCTION NOTES PROVIDED ON THE SEDIMENT AND EROSION CONTROL PLAN.

20. THE CONTRACTOR SHALL REFERENCE ARCHITECTURAL PLANS FOR EXACT DIMENSIONS AND CONSTRUCTION DETAILS OF BUILDING, THE RAISED CONCRETE SIDEWALKS, LANDINGS, AND RAMPS.

21. SHOULD ANY UNCHARTED OR INCORRECTLY CHARTED, EXISTING PIPING OR OTHER UTILITY BE UNCOVERED DURING EXCAVATION, CONSULT THE CIVIL ENGINEER IMMEDIATELY FOR DIRECTIONS BEFORE PROCEEDING FURTHER WITH WORK IN THIS AREA.

22. ALL SITE DIMENSIONS ARE REFERENCED TO THE FACE OF CURBS OR EDGE OF PAVING AS APPLICABLE UNLESS OTHERWISE NOTED. ALL BUILDING DIMENSIONS ARE REFERENCED TO THE OUTSIDE FACE OF THE STRUCTURE.

23. THE CONTRACTOR SHALL PROVIDE AND MAINTAIN TRAFFIC DEVICES FOR PROTECTION OF VEHICLES AND PEDESTRIANS CONSISTING OF DRUMS, BARRIERS, SIGNS, LIGHTS, FENCES, TEMPORARY WALKWAYS, TRAFFIC CONTROLLERS AND UNIFORMED TRAFFIC OFFICERS AS REQUIRED OR AS ORDERED BY THE ENGINEER OR AS REQUIRED BY THE LOCAL GOVERNING AUTHORITIES OR AS REQUIRED BY PERMIT STIPULATIONS OR AS REQUIRED BY THE OWNER. CONTRACTOR SHALL MAINTAIN ALL TRAFFIC LANES AND PEDESTRIAN WALKWAYS FOR USE AT ALL TIMES UNLESS WRITTEN APPROVAL FROM THE APPROPRIATE GOVERNING AGENCY IS GRANTED.

24. TRAFFIC CONTROL SIGNAGE SHALL CONFORM TO THE STATE DOT STANDARD DETAIL SHEETS AND THE MANUAL OF UNIFORM TRAFFIC CONTROL DEVICES. SIGNS SHALL BE INSTALLED PLUMB WITH THE EDGE OF THE SIGN 2' OFF THE FACE OF THE CURB, AND WITH 7' VERTICAL CLEARANCE UNLESS OTHERWISE DETAILED OR NOTED.

25. REFER TO DETAIL SHEETS FOR PAVEMENT, CURBING, AND SIDEWALK INFORMATION.

26. THE CONTRACT LIMIT IS THE PROPERTY LINE UNLESS OTHERWISE SPECIFIED OR SHOWN ON THE CONTRACT DRAWINGS.

27. THE CONTRACTOR SHALL SUBMIT A SHOP DRAWING OF THE PAVEMENT MARKING PAINT MIXTURE PRIOR TO STRIPING.

28. PAVEMENT MARKING KEY:

    4" SYDL 4" SOLID YELLOW DOUBLE LINE
    4" SYL 4" SOLID YELLOW LINE
    4" SWL 4" SOLID WHITE LINE
    12" SWSB 12" SOLID WHITE STOP BAR
    4" BWL 4" BROKEN WHITE LINE 10' STRIPE 30' SPACE

29. PARKING SPACES SHALL BE STRIPED WITH 4" SWL; HATCHED AREA SHALL BE STRIPED WITH 4" SWL AT A 45° ANGLE, 2' ON CENTER. HATCHING, SYMBOLS, AND STRIPING FOR HANDICAPPED SPACES SHALL BE PAINTED WHITE AND BLUE. OTHER MARKINGS SHALL BE PAINTED WHITE OR AS NOTED.

30. ALL PARKING SPACES AND HATCHED AREAS SHALL HAVE TWO COATS OF PAVEMENT MARKINGS APPLIED TO STRIPING.

31. PAVEMENT MARKINGS SHALL BE HOT APPLIED TYPE IN ACCORDANCE WITH STATE DOT SPECIFICATIONS, UNLESS WHERE EPOXY RESIN PAVEMENT MARKINGS ARE INDICATED.

32. THE CONTRACTOR SHALL RESTORE ANY UTILITY STRUCTURE, DRAINAGE STRUCTURE, PIPE, UTILITY, PAVEMENT, CURBS, SIDEWALKS, LANDSCAPED AREAS, SWALE, PAVEMENT MARKINGS, OR SIGNAGE DISTURBED DURING DEMOLITION AND/OR CONSTRUCTION TO THEIR ORIGINAL CONDITION OR BETTER, AS APPROVED BY THE CIVIL ENGINEER, AND TO THE SATISFACTION OF THE OWNER AND MUNICIPALITY.

33. EXISTING BOUNDARY AND TOPOGRAPHY IS BASED ON DRAWING TITLED "ALTA/NSPS LAND TITLE SURVEY" SCALE 1"=20', DATED 10/18/2021, BY BL COMPANIES INC.

34. ALTERNATIVE METHODS AND PRODUCTS OTHER THAN THOSE SPECIFIED MAY BE USED IF REVIEWED AND APPROVED BY THE OWNER, CIVIL ENGINEER, AND APPROPRIATE REGULATORY AGENCY PRIOR TO INSTALLATION DURING THE BIDDING PROCESS.

35. CTDOT ENCROACHMENT PERMIT SHALL BE OBTAINED BY CONTRACTOR WHO SHALL PAY ALL FEES, PROVIDE PROOF OF INSURANCE AND PROVIDE TRAFFIC PROTECTION NECESSARY FOR THE WORK. THE OWNER SHALL POST CTDOT ENCROACHMENT PERMIT BOND.

36. AN EROSION CONTROL BOND IS REQUIRED TO BE POSTED BY THE CONTRACTOR BEFORE THE START OF ANY ACTIVITY ON OR OFF SITE. THE AMOUNT OF THE EROSION CONTROL BOND WILL BE DETERMINED BY THE AUTHORITY HAVING JURISDICTION.

37. THE PROJECT PARCEL IS LOCATED PARTLY OR WHOLLY WITHIN A FEMA DESIGNATED FLOOD HAZARD AREA.

38. THERE ARE NO WETLANDS LOCATED ON THE SITE AS INDICATED BY MUNICIPAL GIS MAPPING.

39. 12" SWSB (STOP BAR) AND 4" SYDL AND SWL PAVEMENT MARKINGS LOCATED IN DRIVEWAYS AND IN STATE HIGHWAY SHALL BE EPOXY RESIN TYPE ACCORDING TO CONNDOT SPECIFICATIONS.

40. FIRE LANES SHALL BE ESTABLISHED AND PROPERLY DESIGNATED IN ACCORDANCE WITH THE REQUIREMENTS OF THE FIRE DISTRICT FIRE MARSHAL.

41. THE CONTRACTOR SHALL REMOVE ANY CONFLICTING PAVEMENT MARKINGS IN THE ROADWAY BY METHOD APPROVED BY THE AUTHORITY HAVING JURISDICTION OR DOT AS APPLICABLE FOR THE LOCATION OF THE WORK.

42. ALL ADA DESIGNATED PARKING STALLS, ACCESS AISLES AND PEDESTRIAN WALKWAYS SHALL CONFORM TO THE CURRENT VERSION OF THE AMERICANS WITH DISABILITIES ACT STANDARDS FOR ACCESSIBLE DESIGN AND ANSI STANDARDS AND AS MAY BE SUPERCEDED BY THE STATE BUILDING CODE.

43. CONSTRUCTION OCCURRING ON THIS SITE SHALL COMPLY WITH NFPA 241 STANDARD FOR SAFEGUARDING CONSTRUCTION, ALTERATION AND DEMOLITION OPERATIONS, AND CHAPTER 16 OF NFPA 1 UNIFORM FIRE CODE.

44. ALL BUILDINGS, INCLUDING FOUNDATION WALLS AND FOOTINGS AND BASEMENT SLABS INDICATED ON THE DEMOLITION PLAN ARE TO BE REMOVED FROM THE SITE. CONTRACTOR SHALL SECURE ANY PERMITS, PAY ALL FEES AND PERFORM CLEARING AND GRUBBING AND DEBRIS REMOVAL PRIOR TO COMMENCEMENT OF GRADING OPERATIONS.

45. SEDIMENT AND EROSION CONTROLS AS SHOWN ON THE SEDIMENT AND EROSION CONTROL PLAN AND/OR DEMOLITION PLAN SHALL BE INSTALLED BY THE DEMOLITION CONTRACTOR PRIOR TO START OF DEMOLITION AND CLEARING AND GRUBBING OPERATIONS.

46. REMOVE AND DISPOSE OF ANY SIDEWALKS, FENCES, STAIRS, WALLS, DEBRIS AND RUBBISH REQUIRING REMOVAL FROM THE WORK AREA IN AN APPROVED OFF SITE LANDFILL, BY AN APPROVED HAULER. HAULER SHALL COMPLY WITH ALL REGULATORY REQUIREMENTS.

47. THE CONTRACTOR SHALL SECURE ALL PERMITS FOR HIS DEMOLITION AND DISPOSAL OF HIS DEMOLITION MATERIAL TO BE REMOVED FROM THE SITE. THE CONTRACTOR SHALL POST BONDS AND PAY PERMIT FEES AS REQUIRED. BUILDING DEMOLITION CONTRACTOR SHALL BE RESPONSIBLE FOR PERMITS AND DISPOSAL OF ALL BUILDING DEMOLITION DEBRIS IN AN APPROVED OFF-SITE LANDFILL.

48. ASBESTOS OR HAZARDOUS MATERIAL, IF FOUND ON SITE, SHALL BE REMOVED BY A LICENSED HAZARDOUS MATERIAL ABATEMENT CONTRACTOR.

49. THE CONTRACTOR SHALL PREPARE ALL MANIFEST DOCUMENTS AS REQUIRED PRIOR TO COMMENCEMENT OF DEMOLITION.

50. THE CONTRACTOR SHALL CUT AND PLUG, OR ARRANGE FOR THE APPROPRIATE UTILITY PROVIDER TO CUT AND PLUG ALL SERVICE PIPING AT THE STREET LINE OR AT THE MAIN, AS REQUIRED BY THE UTILITY PROVIDER, OR AS OTHERWISE NOTED OR SHOWN ON THE CONTRACT DRAWINGS. ALL SERVICES MAY NOT BE SHOWN ON THIS PLAN. THE CONTRACTOR SHALL INVESTIGATE THE SITE PRIOR TO BIDDING TO DETERMINE THE EXTENT OF SERVICE PIPING TO BE REMOVED, CUT OR PLUGGED. THE CONTRACTOR SHALL PAY ALL UTILITY PROVIDER FEES FOR ABANDONMENTS AND REMOVALS.

51. THE CONTRACTOR SHALL PROTECT ALL IRON PINS, MONUMENTS AND PROPERTY CORNERS DURING DEMOLITION AND CONSTRUCTION ACTIVITIES. ANY CONTRACTOR DISTURBED PINS, MONUMENTS, AND OR PROPERTY CORNERS, ETC. SHALL BE RESET BY A LICENSED LAND SURVEYOR AT THE EXPENSE OF THE CONTRACTOR.

52. THE DEMOLITION CONTRACTOR SHALL STABILIZE THE SITE AND KEEP EROSION CONTROL MEASURES IN PLACE UNTIL THE COMPLETION OF HIS WORK OR UNTIL THE COMMENCEMENT OF WORK BY THE SITE CONTRACTOR, WHICHEVER OCCURS FIRST, AS REQUIRED OR DEEMED NECESSARY BY THE ENGINEER OR OWNER'S REPRESENTATIVE. THE SITE CONTRACTOR SHALL ASSUME RESPONSIBILITY FOR THE MAINTENANCE OF EXISTING EROSION AND SEDIMENTATION CONTROLS AND FOR INSTALLATION OF ANY NEW SEDIMENT AND EROSION CONTROLS AS PER THE SEDIMENT AND EROSION CONTROL PLAN, AT THAT TIME.

53. THE CONTRACTOR SHALL PUMP OUT BUILDING FUEL AND WASTE OIL TANKS (IF ANY ARE ENCOUNTERED) AND REMOVE FUEL TO AN APPROVED DISPOSAL AREA BY A LICENSED WASTE OIL HANDLING CONTRACTOR IN STRICT ACCORDANCE WITH STATE REQUIREMENTS.

54. IF IMPACTED OR CONTAMINATED SOIL IS ENCOUNTERED BY THE CONTRACTOR, THE CONTRACTOR SHALL SUSPEND EXCAVATION WORK OF IMPACTED SOIL AND NOTIFY THE OWNER AND/OR OWNER'S ENVIRONMENTAL CONSULTANT PRIOR TO PROCEEDING WITH FURTHER WORK IN THE IMPACTED SOIL LOCATION UNTIL FURTHER INSTRUCTED BY THE OWNER AND/OR OWNER'S ENVIRONMENTAL CONSULTANT.

55. ANY EXISTING WATER SERVICES SHALL BE DISCONNECTED AND CAPPED AT MAIN IN ACCORDANCE WITH THE REQUIREMENTS OF THE WATER UTILITY PROVIDER. REMOVE EXISTING ONSITE WATER PIPING TO BE ABANDONED TO RIGHT OF WAY LINE UNLESS OTHERWISE SHOWN ON DEMOLITION PLANS OR AS REQUIRED BY THE WATER UTILITY PROVIDER TO BE REMOVED TO MAIN.

56. ANY EXISTING SANITARY LATERAL SHALL BE PLUGGED WITH NON-SHRINK GROUT AT CURB LINE OR AT MAIN CONNECTION IN ACCORDANCE WITH THE SANITARY UTILITY PROVIDER REQUIREMENTS. REMOVE EXISTING LATERAL PIPING FROM SITE UNLESS OTHERWISE SHOWN ON DEMOLITION PLANS OR AS REQUIRED BY THE SANITARY UTILITY PROVIDER.

57. ANY DOMESTIC GAS SERVICES SHALL BE CAPPED AND SERVICE LINES PURGED OF RESIDUAL GAS IN ACCORDANCE WITH THE GAS UTILITY PROVIDER REQUIREMENTS. WORK TO BE COORDINATED BY AND PAID FOR BY THE CONTRACTOR. REMOVE EXISTING SERVICE PIPING ON SITE. ANY PROPANE TANKS SHALL BE PURGED OF RESIDUAL GAS BY PROPANE SUPPLIER. CONTRACTOR SHALL COORDINATE THIS WORK AND PAY NECESSARY FEES.

58. THE CONTRACTOR SHALL PROVIDE DISCONNECT NOTIFICATION TO THE MUNICIPALITY ENGINEERING DEPARTMENT, TELECOMMUNICATIONS UTILITY PROVIDER, GAS UTILITY PROVIDER, ELECTRIC UTILITY PROVIDER, SANITARY UTILITY PROVIDER, AND WATER UTILITY PROVIDER AT LEAST THREE WEEKS PRIOR TO BEGINNING DEMOLITION.

59. THE CONTRACTOR IS RESPONSIBLE FOR SECURING A DEMOLITION PERMIT FROM THE MUNICIPALITY'S BUILDING DEPARTMENT AND MUST FURNISH THE REQUIRED APPLICATION MATERIAL AND PAY ALL FEES.

60. BACK FILL DEPRESSIONS, FOUNDATION HOLES AND REMOVED DRIVEWAY AREAS IN LOCATIONS NOT SUBJECT TO FURTHER EXCAVATION WITH SOIL MATERIAL APPROVED BY THE OWNER'S GEOTECHNICAL ENGINEER AND COMPACT, FERTILIZE, SEED AND MULCH DISTURBED AREAS NOT SUBJECT TO FURTHER SITE CONSTRUCTION. DEMOLISHED BUILDING FOUNDATION AREA AND BASEMENT IF PRESENT TO BE BACKFILLED WITH GRAVEL FILL OR MATERIAL SPECIFIED IN THE PROJECT GEOTECHNICAL REPORT IN LIFT THICKNESS SPECIFIED IN THE GEOTECHNICAL REPORT. COMPACT TO 95% MAX. DRY DENSITY PER ASTM D1557 AT MOISTURE CONTENT SPECIFIED IN GEOTECHNICAL REPORT AND EARTHWORK SPECIFICATION. EMPLOY WATERING EQUIPMENT FOR DUST CONTROL.

61. THE CONTRACTOR SHALL REPAIR PAVEMENTS BY INSTALLING TEMPORARY AND PERMANENT PAVEMENTS IN PUBLIC RIGHTS OF WAYS AS REQUIRED BY LOCAL GOVERNING AUTHORITIES AND THE MUNICIPALITY AND PER PERMIT REQUIREMENTS DUE TO DEMOLITION AND PIPE REMOVAL ACTIVITIES.

62. THE CONTRACTOR SHALL CUT AND REMOVE AT LUMINARE AND SIGN LOCATIONS ANY PROTRUDING CONDUITS TO 24" BELOW GRADE. THE CONTRACTOR SHALL REMOVE ALL CABLE AND CONDUCTORS FROM REMAINING LIGHTING AND SIGNING CONDUITS TO BE ABANDONED. ANY REMAINING LIGHTING TO REMAIN IN PLACE SHALL BE RECIRCUITED OR REWIRED AS NECESSARY TO REMAIN IN OPERATION.

63. NO WORK ON THIS SITE SHALL BE INITIATED BY THE CONTRACTOR UNTIL A PRE-CONSTRUCTION MEETING WITH OWNER AND THE CIVIL ENGINEER IS PERFORMED. THE CONTRACTOR SHOULD BE AWARE OF ANY SITE INFORMATION AVAILABLE SUCH AS GEOTECHNICAL AND ENVIRONMENTAL REPORTS. THE CONTRACTOR SHALL HAVE CT CBYD MARK OUTS OF EXISTING UTILITIES COMPLETED PRIOR TO MEETING.

64. THE CONTRACTOR SHALL ARRANGE FOR AND INSTALL TEMPORARY OR PERMANENT UTILITY CONNECTIONS WHERE INDICATED ON PLAN OR AS REQUIRED. MAINTAIN UTILITY SERVICES TO BUILDINGS OR TO SERVICES TO REMAIN. CONTRACTOR TO COORDINATE WITH UTILITY PROVIDERS FOR INSTALLATION AND PAY UTILITY PROVIDER FEES.

65. THE CONTRACTOR SHALL NOT COMMENCE DEMOLITION OR UTILITY DISCONNECTIONS UNTIL AUTHORIZED TO DO SO BY THE OWNER.

66. THE CONTRACTOR OR DEMOLITION CONTRACTOR SHALL INSTALL TEMPORARY SHEETING OR SHORING AS NECESSARY TO PROTECT EXISTING AND NEW BUILDINGS, STRUCTURES AND UTILITIES DURING CONSTRUCTION AND DEMOLITION. SHEETING OR SHORING SHALL BE DESIGNED BY A PROFESSIONAL ENGINEER, LICENSED IN THIS STATE AND EVIDENCE OF SUCH SUBMITTED TO THE OWNER PRIOR TO INSTALLATION.

67. NO SALVAGE SHALL BE PERMITTED UNLESS PAID TO THE OWNER AS A CREDIT.

68. ANY EXISTING POTABLE WELL AND ANY EXISTING SEPTIC TANKS/ABSORPTION AREAS SHALL BE ABANDONED AND REMOVED PER THE CT DEPARTMENT OF PUBLIC HEALTH AND HEALTH CODE REQUIREMENTS.

69. THE CONTRACTOR SHALL PRESERVE EXISTING VEGETATION WHERE POSSIBLE AND/OR AS NOTED ON DRAWINGS. REFER TO SEDIMENT AND EROSION CONTROL PLAN FOR LIMIT OF DISTURBANCE AND EROSION CONTROL NOTES.

70. TOPSOIL SHALL BE STRIPPED AND STOCKPILED ON SITE FOR USE IN FINAL LANDSCAPING.

71. THE CONTRACTOR SHALL COMPACT FILL IN LIFT THICKNESS PER THE GEOTECHNICAL REPORT UNDER ALL PARKING, BUILDING, DRIVE, AND STRUCTURE AREAS TO 95% OF THE MAXIMUM DRY DENSITY AS DETERMINED BY ASTM D1557 (MODIFIED PROCTOR TEST), OR AS REQUIRED BY THE GEOTECHNICAL ENGINEER.

72. UNDERDRAINS SHALL BE ADDED, IF DETERMINED NECESSARY IN THE FIELD BY THE OWNER/GEOTECHNICAL ENGINEER, AFTER SUBGRADE IS ROUGH GRADED.

73. VERTICAL DATUM IS NAVD 88.

74. ANY CLEARING LIMITS SHALL BE PHYSICALLY MARKED IN THE FIELD AND APPROVED BY THE MUNICIPALITIY'S CONSERVATION COMMISSION AGENT PRIOR TO THE START OF WORK ON THE SITE.

75. PROPER CONSTRUCTION PROCEDURES SHALL BE FOLLOWED ON ALL IMPROVEMENTS WITHIN THIS PARCEL SO AS TO PREVENT THE SILTING OF ANY WATERCOURSE OR WETLANDS IN ACCORDANCE WITH THE REGULATIONS OF THE CT DEEP AND THE 2002 CONNECTICUT GUIDELINES FOR SOIL EROSION AND SEDIMENT CONTROL, LATEST EDITION. IN ADDITION, THE CONTRACTOR SHALL STRICTLY ADHERE TO THE SEDIMENT AND EROSION CONTROL PLAN CONTAINED HEREIN. THE CONTRACTOR SHALL BE RESPONSIBLE TO POST ALL BONDS AS REQUIRED BY THE LOCAL MUNICIPALITIES, OR SOIL CONSERVATION DISTRICT WHICH WOULD GUARANTEE THE PROPER IMPLEMENTATION OF THE PLAN.

76. ALL SITE WORK, MATERIALS OF CONSTRUCTION, AND CONSTRUCTION METHODS FOR EARTHWORK AND STORM DRAINAGE WORK SHALL CONFORM TO THE SPECIFICATIONS AND DETAILS AND APPLICABLE SECTIONS OF THE PROJECT SPECIFICATIONS MANUAL. OTHERWISE THIS WORK SHALL CONFORM TO THE STATE DEPARTMENT OF TRANSPORTATION SPECIFICATIONS AND PROJECT GEOTECHNICAL REPORT IF THERE IS NO PROJECT SPECIFICATIONS MANUAL. ALL FILL MATERIAL UNDER STRUCTURES AND PAVED AREAS SHALL BE PER THE ABOVE STATED APPLICABLE SPECIFICATIONS, AND/OR PROJECT GEOTECHNICAL REPORT, AND SHALL BE PLACED IN ACCORDANCE WITH THE APPLICABLE SPECIFICATIONS UNDER THE SUPERVISION OF A QUALIFIED PROFESSIONAL ENGINEER. MATERIAL SHALL BE COMPACTED IN LIFT THICKNESSES PER THE PROJECT GEOTECHNICAL REPORT TO 95% OF THE MAXIMUM DRY DENSITY AS DETERMINED BY ASTM D 1557 AT MOISTURE CONTENT INDICATED IN PROJECT GEOTECHNICAL REPORT.

77. ALL DISTURBANCE INCURRED TO MUNICIPAL AND STATE PROPERTY DUE TO CONSTRUCTION SHALL BE RESTORED TO ITS PREVIOUS CONDITION OR BETTER, TO THE SATISFACTION OF THE MUNICIPALITY AND STATE AS APPLICABLE FOR THE LOCATION OF THE WORK.

78. ALL CONSTRUCTION WITHIN A DOT RIGHT OF WAY SHALL COMPLY WITH ALL DEPARTMENT OF TRANSPORTATION STANDARDS AND SPECIFICATIONS.

79. THE UTILITY PLAN DETAILS SITE INSTALLED PIPES UP TO 5' FROM THE BUILDING FACE. REFER TO ARCHITECTURAL DRAWINGS BY OTHERS FOR BUILDING CONNECTIONS. SITE CONTRACTOR SHALL SUPPLY AND INSTALL PIPE ADAPTERS AS NECESSARY AT BUILDING CONNECTION POINT OR AT EXISTING UTILITY OR PIPE CONNECTION POINT.

80. THE CONTRACTOR SHALL VISIT THE SITE AND VERIFY THE ELEVATION AND LOCATION OF ALL UTILITIES BY VARIOUS MEANS PRIOR TO BEGINNING ANY EXCAVATION. TEST PITS SHALL BE DUG AT ALL LOCATIONS WHERE PROPOSED SANITARY SEWERS AND WHERE PROPOSED STORM PIPING WILL CROSS EXISTING UTILITIES, AND THE HORIZONTAL AND VERTICAL LOCATIONS OF THE UTILITIES SHALL BE DETERMINED. THE CONTRACTOR SHALL CONTACT THE CIVIL ENGINEER IN THE EVENT OF ANY DISCOVERED OR UNFORESEEN CONFLICTS BETWEEN EXISTING AND PROPOSED SANITARY SEWERS, STORM PIPING AND UTILITIES SO THAT AN APPROPRIATE MODIFICATION MAY BE MADE.

81. UTILITY CONNECTION DESIGN AS REFLECTED ON THE PLAN MAY CHANGE SUBJECT TO UTILITY PROVIDER AND GOVERNING AUTHORITY STAFF REVIEW.

82. THE CONTRACTOR SHALL ENSURE THAT ALL UTILITY PROVIDERS AND GOVERNING AUTHORITY STANDARDS FOR MATERIALS AND CONSTRUCTION METHODS ARE MET. THE CONTRACTOR SHALL PERFORM PROPER COORDINATION WITH THE RESPECTIVE UTILITY PROVIDER.

83. THE CONTRACTOR SHALL ARRANGE FOR AND COORDINATE WITH THE RESPECTIVE UTILITY PROVIDERS FOR SERVICE INSTALLATIONS AND CONNECTIONS. THE CONTRACTOR SHALL COORDINATE WORK TO BE PERFORMED BY THE VARIOUS UTILITY PROVIDERS AND SHALL PAY ALL FEES FOR CONNECTIONS, DISCONNECTIONS, RELOCATIONS, INSPECTIONS, AND DEMOLITION UNLESS OTHERWISE STATED IN THE PROJECT SPECIFICATIONS MANUAL AND/OR GENERAL CONDITIONS OF THE CONTRACT.

84. ALL EXISTING PAVEMENT WHERE UTILITY PIPING IS TO BE INSTALLED SHALL BE SAW CUT. AFTER UTILITY INSTALLATION IS COMPLETED, THE CONTRACTOR SHALL INSTALL TEMPORARY AND/OR PERMANENT PAVEMENT REPAIR AS DETAILED ON THE DRAWINGS OR AS REQUIRED BY THE OWNER HAVING JURISDICTION.

85. ALL PIPES SHALL BE LAID ON STRAIGHT ALIGNMENTS AND EVEN GRADES USING A PIPE LASER OR OTHER ACCURATE METHOD.

86. SANITARY LATERAL SHALL MAINTAIN (10' MIN. HORIZONTAL 1.5' VERTICAL MIN.) SEPARATION DISTANCE FROM WATER LINES, OR ADDITIONAL PROTECTION MEASURES WILL BE REQUIRED WHERE PERMITTED, WHICH SHALL INCLUDE CONCRETE ENCASEMENT OF PIPING UNLESS OTHERWISE DIRECTED BY THE UTILITY PROVIDERS AND CIVIL ENGINEER.

87. RELOCATION OF UTILITY PROVIDER FACILITIES SHALL BE DONE IN ACCORDANCE WITH THE REQUIREMENTS OF THE UTILITY PROVIDER.

88. THE CONTRACTOR SHALL COMPACT THE PIPE BACKFILL IN 8" LIFTS ACCORDING TO THE PIPE BEDDING DETAILS. TRENCH BOTTOM SHALL BE STABLE IN HIGH GROUNDWATER AREAS. A PIPE FOUNDATION SHALL BE USED PER THE TRENCH DETAILS AND IN AREAS OF ROCK EXCAVATION.

89. CONTRACTOR TO PROVIDE STEEL SLEEVES AND ANNULAR SPACE SAND FILL FOR UTILITY PIPE AND CONDUIT CONNECTIONS UNDER FOOTINGS.

90. BUILDING UTILITY PENETRATIONS AND LOCATIONS ARE SHOWN FOR THE CONTRACTOR'S INFORMATION AND SHALL BE VERIFIED WITH THE BUILDING MEP, STRUCTURAL, AND ARCHITECTURAL DRAWINGS AND WITH THE OWNER'S CONSTRUCTION MANAGER.

91. ALL UTILITY CONSTRUCTION IS SUBJECT TO INSPECTION FOR APPROVAL PRIOR TO BACKFILLING, IN ACCORDANCE WITH THE APPROPRIATE UTILITY PROVIDER REQUIREMENTS.

92. A ONE-FOOT MINIMUM VERTICAL CLEARANCE BETWEEN WATER, GAS, ELECTRICAL, AND TELEPHONE LINES AND STORM PIPING SHALL BE PROVIDED. A SIX-INCH MINIMUM CLEARANCE SHALL BE MAINTAINED BETWEEN STORM PIPING AND SANITARY SEWER WITH A CONCRETE ENCASEMENT. AN 18-INCH TO 6-INCH VERTICAL CLEARANCE BETWEEN SANITARY SEWER PIPING AND STORM PIPING SHALL REQUIRE CONCRETE ENCASEMENT OF THE PROPOSED PIPING.

93. GRAVITY SANITARY SEWER PIPING AND PRESSURIZED WATERLINES SHALL BE LOCATED IN SEPARATE TRENCHES AT LEAST 10 FEET APART WHENEVER POSSIBLE. WHEN INSTALLED IN THE SAME TRENCH, THE WATER PIPE SHALL BE LAID ON A TRENCH BENCH AT LEAST 18 INCHES ABOVE THE TOP OF THE SANITARY SEWER PIPE AND AT LEAST 12 INCHES (PREFERABLY 18 INCHES) FROM THE SIDE OF THE SANITARY SEWER PIPE TRENCH.

94. SITE CONTRACTOR SHALL PROVIDE ALL BENDS, FITTINGS, ADAPTERS, ETC., AS REQUIRED FOR PIPE CONNECTIONS TO BUILDING STUB OUTS, INCLUDING ROOF/FOOTING DRAIN CONNECTIONS TO ROOF LEADERS AND TO STORM DRAINAGE SYSTEM.

95. MANHOLE RIMS AND CATCH BASIN GRATES SHALL BE SET TO ELEVATIONS SHOWN. SET ALL EXISTING MANHOLE RIMS AND VALVE COVERS TO BE RAISED OR LOWERED FLUSH WITH FINAL GRADE AS NECESSARY.

96. SITE CONTRACTOR SHALL COORDINATE INSTALLATION OF CONDUIT AND CABLES FOR SITE LIGHTING WITH THE BUILDING ELECTRICAL CONTRACTOR.

97. CONTRACTOR SHALL COORDINATE INSTALLATION FOR ELECTRICAL SERVICES TO PYLON SIGNS AND SITE LIGHTING WITH THE BUILDING ELECTRICAL CONTRACTOR.

98. THE CONTRACTOR SHALL ARRANGE AND COORDINATE WITH UTILITY PROVIDERS FOR WORK TO BE PERFORMED BY UTILITY PROVIDERS. THE CONTRACTOR SHALL PAY ALL UTILITY FEES UNLESS OTHERWISE STATED IN THE PROJECT SPECIFICATION MANUAL AND GENERAL CONDITIONS, AND REPAIR PAVEMENTS AS NECESSARY.

99. ELECTRIC, AND TELECOMMUNICATIONS SERVICES SHALL BE INSTALLED UNDERGROUND FROM SERVICE POLE SNET #3037. THE CONTRACTOR SHALL PROVIDE AND INSTALL AND BACKFILL (2) 4" SCH 80 PVC CONDUITS FOR TELECOMMUNICATIONS SERVICE, (2) 4" SCH 80 PVC CONDUITS FOR ELECTRIC SERVICE PRIMARY, PVC CONDUITS FOR ELECTRICAL SECONDARY PER BUILDING ELECTRICAL PLANS, (SCHEDULE 80 UNDER PAVEMENT, SCHEDULE 40 IN NON PAVEMENT AREAS). SERVICES MAY BE INSTALLED IN A COMMON TRENCH WITH 12" CLEAR SPACE BETWEEN. MINIMUM COVER IS 36" ON ELECTRIC CONDUITS, AND 24" ON TELECOMMUNICATIONS CONDUITS. SERVICES SHALL BE MARKED WITH MAGNETIC LOCATOR TAPE AND SHALL BE BEDDED, INSTALLED, AND BACKFILLED IN ACCORDANCE WITH ELECTRIC UTILITY PROVIDER, AND TELECOMMUNICATIONS COMPANY STANDARDS. GALVANIZED STEEL ELECTRICAL CONDUIT SHALL BE USED AT POLE AND TRANSFORMER LOCATIONS. INSTALL HANDHOLES AS REQUIRED TO FACILITATE INSTALLATION AND AS REQUIRED BY UTILITY PROVIDER. INSTALL TRAFFIC LOAD QUALIFIED HANDHOLES IN VEHICULAR AREAS. INSTALL CONCRETE ENCASEMENT ON PRIMARY ELECTRIC CONDUITS IF REQUIRED BY ELECTRIC UTILITY PROVIDER.

100. ALL WATER LINES TO HAVE A MINIMUM COVER OF 4'-6". ALL LINES SHALL BE BEDDED IN 6" SAND AND INITIALLY BACKFILLED WITH 12" SAND.

101. ALL WATER MAINS, WATER SERVICES AND SANITARY SEWER LATERALS SHALL CONFORM TO THE APPLICABLE WATER UTILITY PROVIDER SPECIFICATIONS, AND TO THE APPLICABLE SANITARY SEWER PROVIDER SPECIFICATIONS, AS WELL AS TO OTHER APPLICABLE INDUSTRY CODES (AWWA) AND PROJECT SPECIFICATIONS FOR POTABLE WATER SYSTEMS, AND FOR SANITARY SEWER SYSTEMS.

102. THE CONTRACTOR SHALL MAINTAIN ALL FLOWS AND UTILITY CONNECTIONS TO EXISTING BUILDINGS WITHOUT INTERRUPTION UNLESS/UNTIL AUTHORIZED TO DISCONNECT BY THE OWNERS, THE CIVIL ENGINEER, UTILITY PROVIDERS AND GOVERNING AUTHORITIES.

103. THE CONTRACTOR MAY SUBSTITUTE MASONRY STRUCTURES FOR PRECAST STRUCTURES IF APPROVED BY THE CIVIL ENGINEER AND ALLOWED BY THE GOVERNING AUTHORITY ENGINEER OR OTHER GOVERNING AUTHORITY.

104. PIPING SHALL BE LAID FROM DOWNGRADIENT END OF PIPE RUN IN AN UPGRADIENT DIRECTION WITH BELL END FACING UPGRADE IN THE DIRECTION OF PIPE LAYING.

105. POLYVINYL CHLORIDE PIPE (PVCP) FOR STORM PIPING SHALL HAVE BUILT-IN RUBBER GASKET JOINTS. PVCP SHALL CONFORM TO ASTM D-3034 (SDR35) WITH COMPRESSION JOINTS AND MOLDED FITTINGS. PVCP SHALL BE INSTALLED IN ACCORDANCE WITH THE DETAILS; ASTM-D2321 AND MANUFACTURERS RECOMMENDED PROCEDURE.

106. ALL RCP SHALL CONFORM TO THE REQUIREMENTS OF ASTM C-76; ALL RCP SHALL BE CLASS IV UNLESS OTHERWISE SHOWN. JOINTS SHALL CONFORM TO THE REQUIREMENTS OF ASTM C-443.

107. MANHOLE SECTIONS AND CONSTRUCTION SHALL CONFORM TO ASTM C-478.

108. HIGH DENSITY POLYETHYLENE (HDPE) STORM SEWER 12" OR GREATER IN DIAMETER SHALL BE HI-Q SURE-LOK 10.8 PIPE AS MANUFACTURED BY HANCOR INC. OR APPROVED EQUAL. HDPE PIPE SHALL HAVE SMOOTH INTERIOR AND CORRUGATED EXTERIOR AND SHALL MEET THE REQUIREMENTS OF AASHTO M294, TYPE S. PIPE SECTIONS SHALL BE JOINED WITH BELL-AND-SPIGOT JOINT MEETING THE REQUIREMENTS OF AASHTO M294. THE BELL SHALL BE AN INTEGRAL PART OF THE PIPE AND PROVIDE A MINIMUM PULL-APART STRENGTH OF 400 POUNDS. THE JOINT SHALL BE WATERTIGHT ACCORDING TO THE REQUIREMENTS OF ASTM D3212. GASKETS SHALL BE MADE OF POLYISOPRENE MEETING THE REQUIREMENTS OF ASTM F477. ALTERNATIVE HDPE PIPE MAY BE USED IF APPROVED BY THE ENGINEER AND OWNER'S CONSTRUCTION MANAGER PRIOR TO ORDERING.

109. HIGH DENSITY POLYETHYLENE (HDPE) STORM SEWER LESS THAN 12" IN DIAMETER SHALL BE HI-Q PIPE AS MANUFACTURED BY HANCOR INC. OR APPROVED EQUAL. HDPE PIPE SHALL HAVE SMOOTH INTERIOR AND CORRUGATED EXTERIOR AND SHALL MEET THE REQUIREMENTS OF AASHTO 252, TYPE S. PIPE SECTIONS SHALL BE JOINED WITH COUPLING BANDS OR EXTERNAL SNAP COUPLERS COVERING AT LEAST 2 FULL CORRUGATIONS ON EACH END OF THE PIPE. SILT-TIGHT (GASKET) CONNECTIONS SHALL INCORPORATE A CLOSED SYNTHETIC EXPANDED RUBBER GASKET. MEETING THE REQUIREMENTS OF AASHTO D1056 GRADE 2A2. GASKETS SHALL BE INSTALLED ON THE CONNECTION BY THE PIPE MANUFACTURER. ALTERNATIVE HDPE PIPE MAY BE USED IF APPROVED BY THE ENGINEER AND OWNER'S CONSTRUCTION MANAGER PRIOR TO ORDERING.

110. COPPER PIPE SHALL BE TYPE K TUBING WITH COMPRESSION FITTINGS.

111. GAS PIPE MATERIAL SHALL BE PER PROPANE COMPANY REQUIREMENTS.

112. POLYVINYL CHLORIDE PIPE (PVCP) FOR SANITARY PIPING SHALL HAVE BUILT-IN RUBBER GASKET JOINTS. PVCP SHALL CONFORM TO ASTM D3034 (SDR35) WITH COMPRESSION JOINTS AND MOLDED FITTINGS. PVCP SHALL BE INSTALLED IN ACCORDANCE WITH THE DETAILS, ASTM D2321 AND MANUFACTURER'S RECOMMENDED PROCEDURE.

117. WELL PIPING SHALL BE HDPE WELL TUBING DR11 PER ASTM D2239 AND PE 4710 FOR IPS WATER LINE, OR CTS CONFORMING TO ASTM D2737 FOR SDR9 AND PE 3408/3608.

DEFINITIONS

MUNICIPALITY SHALL MEAN TOWN OF ANDOVER

COUNTY SHALL MEAN TOLLAND

STATE SHALL MEAN CONNECTICUT

POTABLE WELL AUTHORITY SHALL MEAN CONNECTICUT DEPARTMENT OF HEALTH

SEPTIC SYSTEM AUTHORITY SHALL MEAN CONNECTICUT DEPARTMENT OF HEALTH

SUBSURFACE GAS IS NOT AVAILABLE AT THIS LOCATION

TELECOMMUNICATIONS UTILITY PROVIDER SHALL MEAN FRONTIER

ELECTRIC UTILITY PROVIDER SHALL MEAN EVERSOURCE

FOR PERMITTING PURPOSES ONLY
NOT RELEASED FOR CONSTRUCTION

Architecture
Engineering
Environmental
Land Surveying

BL Companies

100 Constitution Plaza, 10th Floor
Hartford, CT 06103
(860) 249-2200
(860) 249-2400 Fax

PROPOSED RETAIL DEVELOPMENT
580 LAKE ROAD
ANDOVER, TOLLAND COUNTY, CONNECTICUT

REVISIONS

No.	Date	Desc.
1.	12/10/2021	REVISED PER HEALTH DEPARTMENT COMMENTS

Designed	S.E.L.
Drawn	Z.T.Z.
Reviewed	J.A.B.
Scale	NONE
Project No.	2101726
Date	11/18/2021
CAD File:	GN210172601

Title

GENERAL NOTES

Sheet No.

GN-1

Xref (s): ; BD210172601

12/9/2021, SLECLERC, G:\JOBS21\16\2101726\DWG\GN210172601.DWG,GN-1 24X36.

© 2021 BL COMPANIES, INC. THESE DRAWINGS SHALL NOT BE UTILIZED BY ANY PERSON, FIRM OR CORPORATION WITHOUT THE SPECIFIC WRITTEN PERMISSION OF BL COMPANIES.

ZONING INFORMATION

LOCATION: TOWN OF ANDOVER, TOLLAND COUNTY, CONNECTICUT				
ZONE: INDUSTRIAL (I)				
USE: RETAIL SALES WITHIN A COMPLETELY CLOSED BUILDING (USE PERMITTED BY SITE PLAN REVIEW – PZC MAY HOLD PUBLIC HEARING)*				
ITEM #	ITEM	REQUIREMENTS	PROPOSED	VARIANCE
1	MINIMUM LOT AREA	40,000 S.F. (~0.92 AC.)	54,034 S.F. (~1.24 AC.)	NO
2	MINIMUM LOT WIDTH	200 FEET	±165 FEET (LAKE RD.) ±315 FEET (RT. 6)	NO
3	MINIMUM LOT FRONTAGE	200 FEET	496 FEET	NO
4	MINIMUM FRONT SETBACK	100 FEET [1]	122.8 FEET [1]	NO
5	MINIMUM SIDE YARD BUILDING SETBACK	35 FEET (65 FEET ALONG RT–6) [1]	36.0 FEET	NO
6	MINIMUM TOTAL SIDE YARD BUILDING SETBACK	75 FEET [2]	106.4 FEET	NO
7	MINIMUM REAR YARD BUILDING SETBACK	35 FEET	71.9 FEET	NO
8	MAXIMUM BUILDING HEIGHT	35 FEET/ 2 STORIES	< 35 FEET	NO
9	MAXIMUM LOT COVERAGE	50 PERCENT	48.7 PERCENT	NO

* NO APPLICATION FOR SPECIAL PERMIT/EXCEPTION OR SITE PLAN REVIEW SHALL BE DEEMED COMPLETE WITHOUT THE SUBMISSION OF A CERTIFIED COPY OF A MOTION FOR APPROVAL OF AN INLAND WETLANDS PERMIT AS ISSUED BY THE ANDOVER INLAND WETLANDS AND WATERCOURSES COMMISSION

* IN ZONE B BUILDING FFE MUST BE LOCATED ABOVE FLOOD ELEVATION

1. A CORNER LOT SHALL MAINTAIN FRONT YARD REQUIREMENTS FOR THE STREET ON WHICH THE MAIN BUILDING FACES. A SIDE YARD OF A MINIMUM OF 65% OF THE SETBACK LINE FOR THE SIDE STREET SHALL BE MAINTAINED. ALL ACCESSORY BUILDINGS SHALL MAINTAIN FRONT YARD REQUIREMENTS FOR EACH STREET FRONTAGE. THE FRONT SETBACK ON US–6 CAN BE REDUCED TO 65 FEET WHILE THE BUILDING FACES LAKE ROAD
2. TOTAL SIDE YARD BUILDING SETBACK IS THE CUMULATIVE VALUE OF THE REQUIRED TWO SIDE YARDS HAVING THE MINIMUM OF ONE SIDE BEING 35 FEET. REFER TO NOTE 1 FOR THE CORNER LOT CONDITION OF THIS RULE ALONG ROUTE 6.

PARKING INFORMATION

ITEM #	ITEM	REQUIREMENTS	PROPOSED	VARIANCE
1	BUILDING SIZE	1,000 S.F.	10,640 S.F.	NO
2	MINIMUM PARKING REQUIRED	RETAIL: MIN: 2 SPACES PER EVERY 1,000 S.F. OF GROSS FLOOR AREA (10,640 S.F.) TOTAL REQUIRED = 22	35 SPACES	NO
3	MAXIMUM PARKING REQUIRED	RETAIL: MAX: 5 SPACES PER EVERY 1,000 S.F. OF GROSS FLOOR AREA (10,640 S.F.) TOTAL ALLOWED = 54		NO
4	BICYCLE REQUIREMENTS	1 SPACE FOR EVERY 15 PARKING SPACES TOTAL REQUIRED = 3	4 SPACES	NO
5	MINIMUM HANDICAPPED PARKING SPACES REQUIRED	2 SPACES	2 SPACES	NO
6	MINIMUM PARKING DIMENSIONS	9 FEET X 18 FEET	9 FEET X 20 FEET	NO
7	MINIMUM BICYCLE DIMENSIONS	12 S.F.	13.5 S.F.	NO
8	MINIMUM AISLE WIDTH	24 FEET – 2–WAY 20 FEET – 1–WAY	24 FEET – 2–WAY	NO
9	MINIMUM FRONT YARD PARKING SETBACK	NONE REQUIRED	25.4 FEET	NO
8	MINIMUM SIDE YARD PARKING SETBACK	NONE REQUIRED	4.7 FEET	NO
9	MINIMUM REAR YARD PARKING SETBACK	NONE REQUIRED	89.9 FEET	NO

TRAFFIC SIGN LEGEND

SIGN NO.	MUTCD NO.	LEGEND
A	31–0552	STOP 30"
B	31–0629 (SIMILAR)	VAN ACCESSIBLE / HANDICAPPED PARKING
C	31–0648	VAN ACCESSIBLE

NOTE:
1. HANDICAPPED SIGNS TO BE INSTALLED IN PIPE BOLLARDS (SEE DETAIL). ALL HANDICAP SIGNAGE TO CONFORM TO THE LATEST BUILDING CODE.
2. ANY SIGN POSTED IN THE STATE RIGHT OF WAY MUST CONFORM TO THE STATE STANDARDS FOR HEIGHT, BREAKAWAY POSTS, RETROREFLECTIVITY, ETC.

SITE PLAN LEGEND

- PROPERTY LINE
- LOD — LIMIT OF DISTURBANCE AND SITE WORK CONTRACT LIMIT LINE
- PAVEMENT SAWCUT LINE
- PROVIDE AND INSTALL BITUMINOUS CONCRETE CURB
- 6' HIGH BLACK VINYL COATED CHAIN LINK TRASH ENCLOSURE FENCE WITH PRIVACY SLATS AND GATE
- PROVIDE AND INSTALL CONCRETE PAVEMENT STRUCTURE, CONCRETE PAD, OR MONOLITHIC CONCRETE CURB AND SIDEWALK
- PROVIDE AND INSTALL FULL DEPTH STANDARD DUTY BITUMINOUS CONCRETE PAVEMENT STRUCTURE
- PROVIDE AND INSTALL FULL DEPTH HEAVY DUTY BITUMINOUS CONCRETE PAVEMENT STRUCTURE
- PROVIDE AND INSTALL FULL DEPTH H–20 LOAD RATED PERVIOUS PAVEMENT STRUCTURE
- PROVIDE AND INSTALL SIGN AND SIGN POST
- PROPOSED BUILDING

GRAPHIC SCALE
30 15 0 30
SCALE IN FEET

FOR PERMITTING PURPOSES ONLY
NOT RELEASED FOR CONSTRUCTION

REFER TO SHEET GN-1 FOR SITE WORK GENERAL NOTES

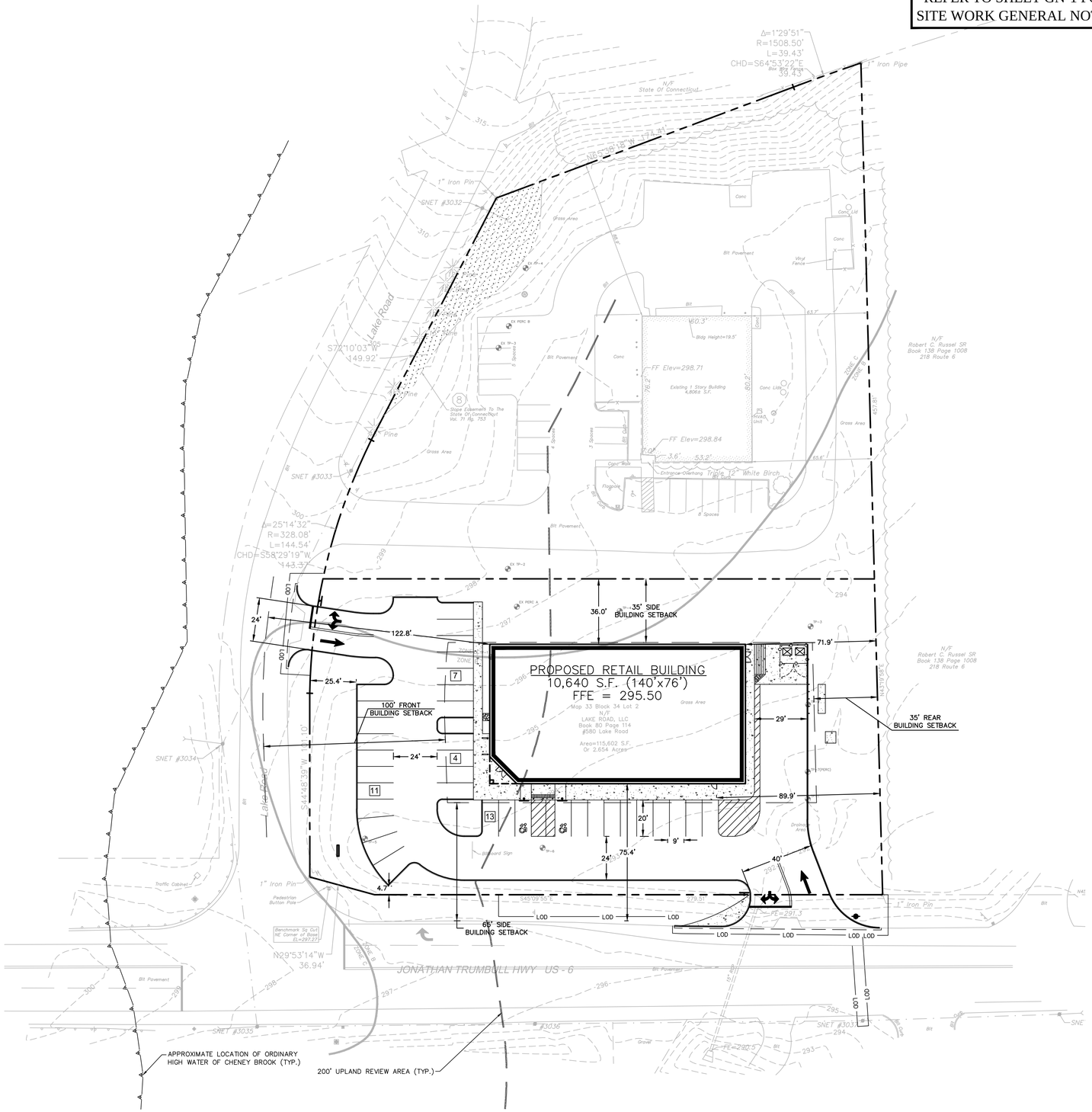

Architecture
Engineering
Environmental
Land Surveying
BL Companies
100 Constitution Plaza, 10th Floor
Hartford, CT 06103
(860) 249-2200
(860) 249-2400 Fax

STATE OF CONNECTICUT
LICENSED PROFESSIONAL ENGINEER

PROPOSED RETAIL DEVELOPMENT
580 LAKE ROAD
ANDOVER, TOLLAND COUNTY, CONNECTICUT

REVISIONS No.	Date	Desc.
1.	12/10/2021	REVISED PER HEALTH DEPARTMENT COMMENTS

Designed	S.E.L.
Drawn	Z.T.Z.
Reviewed	J.A.B.
Scale	1"=30'
Project No.	2101726
Date	11/18/2021
CAD File: OP210172601	

Title
OVERALL SITE PLAN

Sheet No.
OP-1

Xref(s): BD210172601; XC210172601; XV210172601

© 2021 BL COMPANIES, INC. THESE DRAWINGS SHALL NOT BE UTILIZED BY ANY PERSON, FIRM OR CORPORATION WITHOUT THE SPECIFIC WRITTEN PERMISSION OF BL COMPANIES.

FOR PERMITTING PURPOSES ONLY
NOT RELEASED FOR CONSTRUCTION

REFER TO SHEET GN-1 FOR
SITE WORK GENERAL NOTES

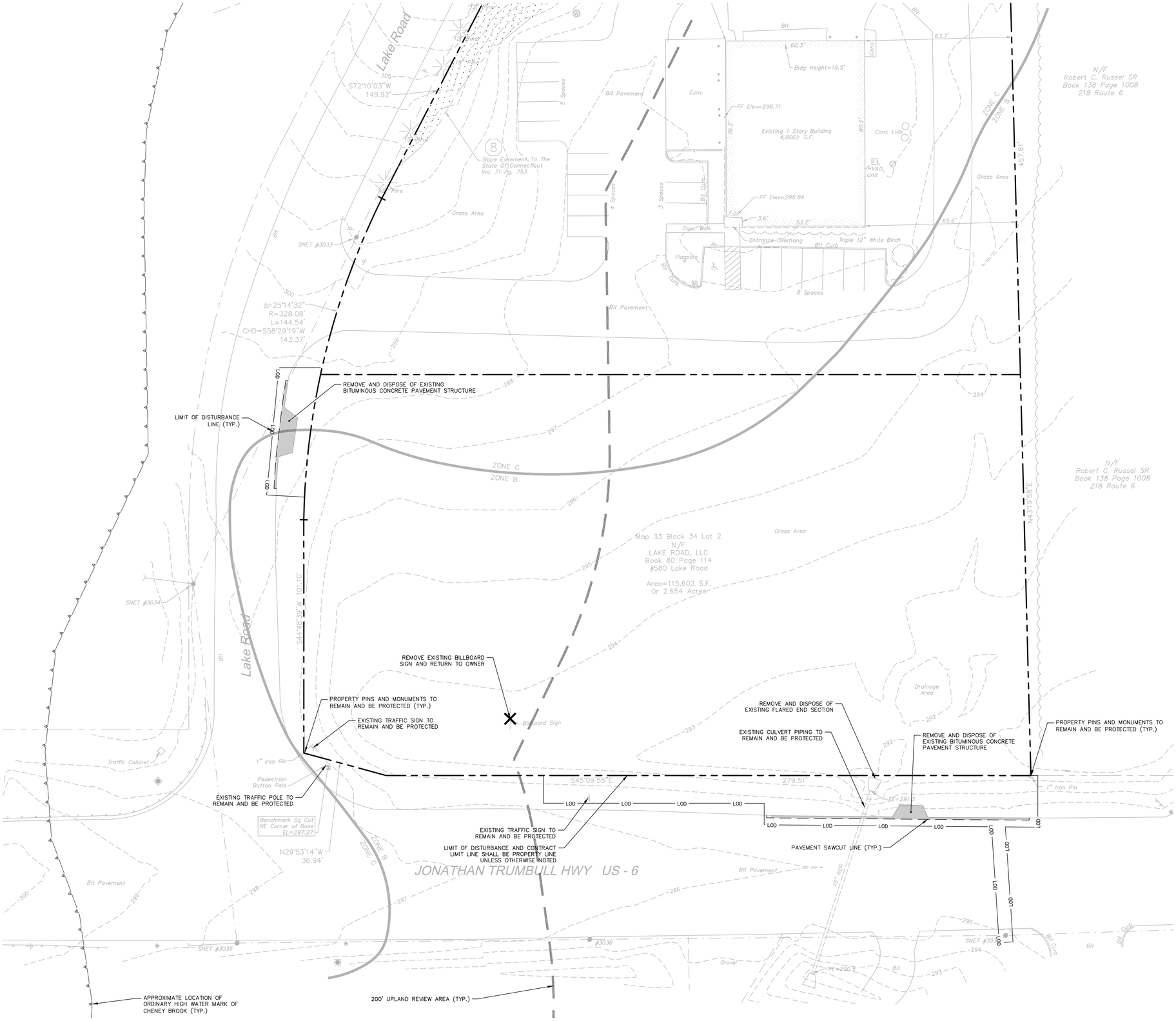

DEMOLITION LEGEND

- PROPERTY LINE
- LOD — LIMIT OF DISTURBANCE AND SITEWORK CONTRACT LIMIT LINE
- SAWCUT LINE
- REMOVE AND DISPOSE OF EXISTING BITUMINOUS CONCRETE PAVEMENT STRUCTURE
- REMOVE AND DISPOSE OF SIGN, HYDRANT, FIXTURE, STRUCTURE, ETC.

GRAPHIC SCALE
20 10 0 20
SCALE IN FEET

Architecture
Engineering
Environmental
Land Surveying
BL Companies
100 Constitution Plaza, 10th Floor
Hartford, CT 06103
(860) 249-2200
(860) 249-2400 Fax

STATE OF CONNECTICUT
JOHN A. BOSCO
No. 19,203
LICENSED
PROFESSIONAL ENGINEER

PROPOSED RETAIL DEVELOPMENT
580 LAKE ROAD
ANDOVER, TOLLAND COUNTY, CONNECTICUT

REVISIONS No.	Date	Desc.
1.	12/10/2021	REVISED PER HEALTH DEPARTMENT COMMENTS

Designed	S.E.L.
Drawn	Z.T.Z.
Reviewed	J.A.B.
Scale	1"=20'
Project No.	2101726
Date	11/18/2021

CAD File: DM210172601

Title
DEMOLITION PLAN

Sheet No.
DM-1

Xref(s): DB2101726-01; XC210172601; XY210172601; XC210172606

12/9/2021, SEELEBRC, G:\JOBS21\DB2101726\DWG\DM210172601.DWG, DM-1, ARCH 20NC

© 2021 BL COMPANIES, INC. THESE DRAWINGS SHALL NOT BE UTILIZED BY ANY PERSON, FIRM OR CORPORATION WITHOUT THE SPECIFIC WRITTEN PERMISSION OF BL COMPANIES.

FOR PERMITTING PURPOSES ONLY
NOT RELEASED FOR CONSTRUCTION

REFER TO SHEET GN-1 FOR SITE WORK GENERAL NOTES

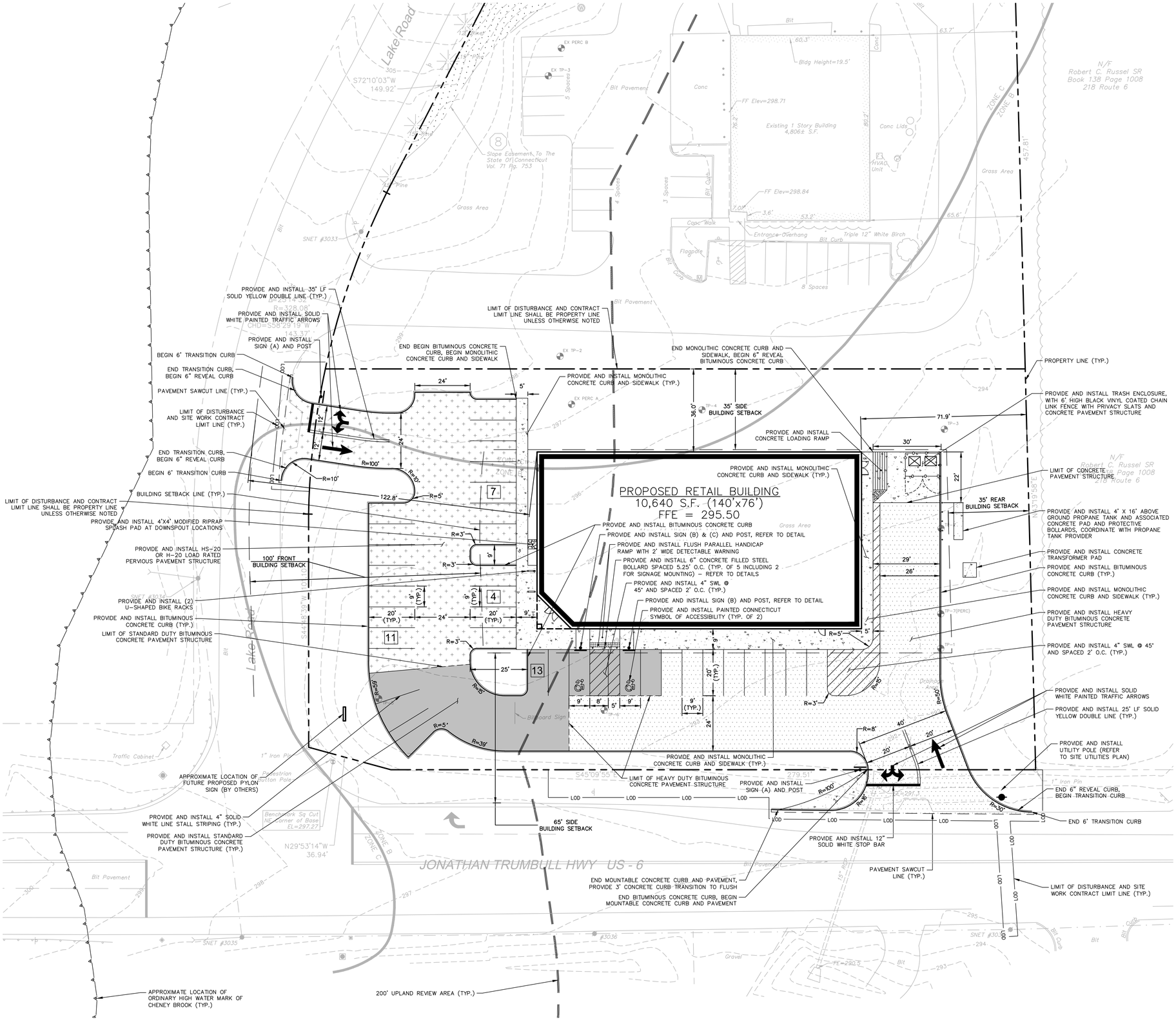

SITE PLAN LEGEND

- PROPERTY LINE
- LOD — LIMIT OF DISTURBANCE AND SITE WORK CONTRACT LIMIT LINE
- PAVEMENT SAWCUT LINE
- PROVIDE AND INSTALL BITUMINOUS CONCRETE CURB
- 6' HIGH BLACK VINYL COATED CHAIN LINK TRASH ENCLOSURE FENCE WITH PRIVACY SLATS AND GATE
- PROVIDE AND INSTALL CONCRETE PAVEMENT STRUCTURE, CONCRETE PAD, OR MONOLITHIC CONCRETE CURB AND SIDEWALK
- PROVIDE AND INSTALL FULL DEPTH STANDARD DUTY BITUMINOUS CONCRETE PAVEMENT STRUCTURE
- PROVIDE AND INSTALL FULL DEPTH HEAVY DUTY BITUMINOUS CONCRETE PAVEMENT STRUCTURE
- PROVIDE AND INSTALL FULL DEPTH H-20 LOAD RATED PERVIOUS PAVEMENT STRUCTURE
- PROVIDE AND INSTALL SIGN AND SIGN POST
- PROPOSED BUILDING

Architecture
Engineering
Environmental
Land Surveying
BL Companies

100 Constitution Plaza, 10th Floor
Hartford, CT 06103
(860) 249-2200
(860) 249-2400 Fax

STATE OF CONNECTICUT
SHELDON L. TRUMBULL
No. 28223
LICENSED
PROFESSIONAL ENGINEER

PROPOSED RETAIL DEVELOPMENT
580 LAKE ROAD
ANDOVER, TOLLAND COUNTY, CONNECTICUT

Dwg.:
REVISED PER HEALTH DEPARTMENT COMMENTS

REVISIONS		
No.	Description	Date
1.		12/10/2021

Designed	S.E.L.
Drawn	Z.T.Z.
Reviewed	J.A.B.
Scale	1"=20'
Project No.	2101726
Date	11/18/2021
CAD File: SP2101726 01	

Title
SITE PLAN

Sheet No.
SP-1

Xref's: BD2101726 01; XC2101726 01; XV2101726 01

12/10/2021, SLEEVERS, G:\1100\21\1826\2101726\DWG\SP2101726 01.DWG\SP-1 24X36.DWG

© 2021 BL COMPANIES, INC. THESE DRAWINGS SHALL NOT BE UTILIZED BY ANY PERSON, FIRM OR CORPORATION WITHOUT THE SPECIFIC WRITTEN PERMISSION OF BL COMPANIES.

FOR PERMITTING PURPOSES ONLY
NOT RELEASED FOR CONSTRUCTION

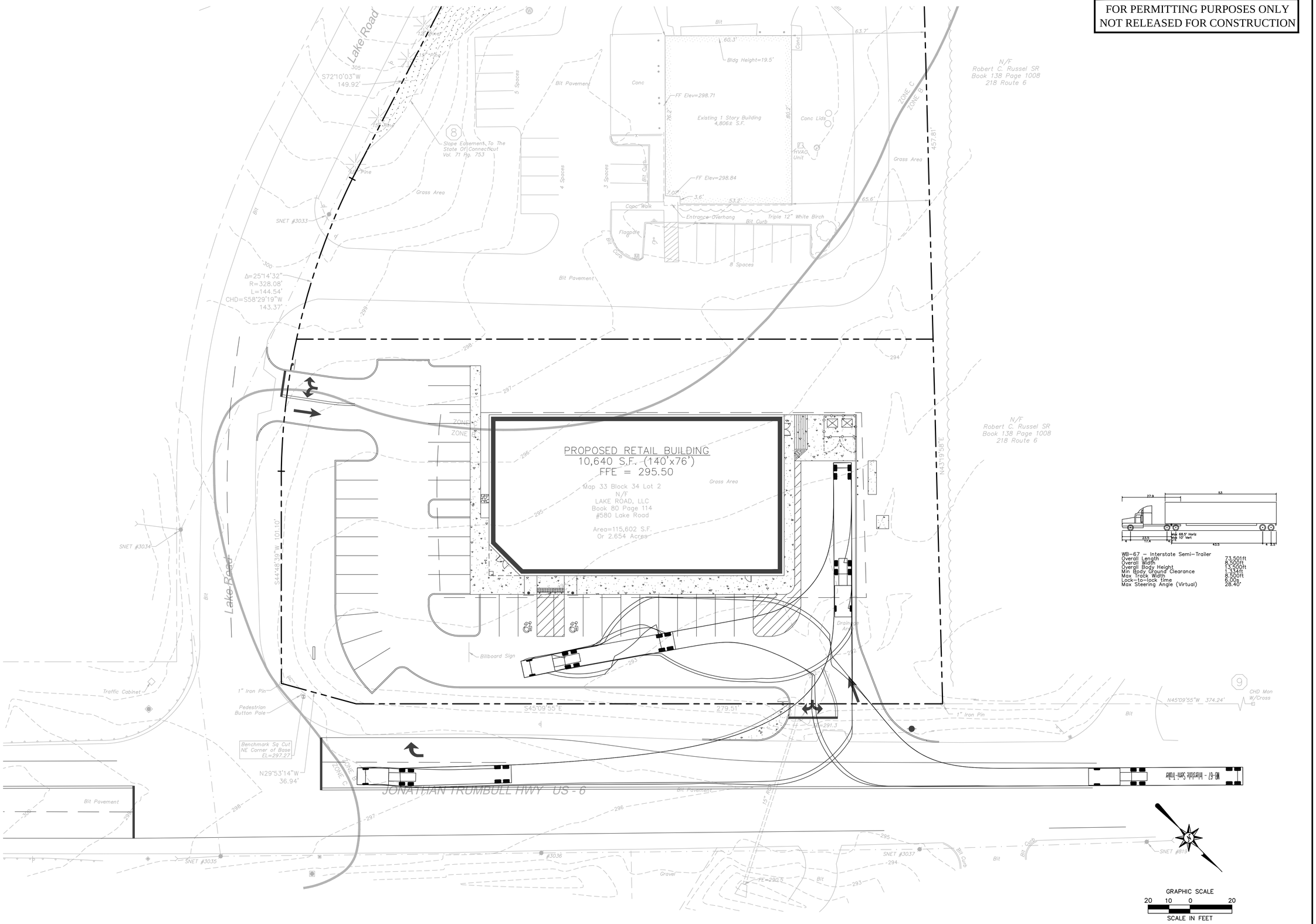

Architecture
Engineering
Environmental
Land Surveying
BL Companies

100 Constitution Plaza, 10th Floor
Hartford, CT 06103
(860) 249-2200
(860) 249-2400 Fax

STATE OF CONNECTICUT
TIMOTHY J. TYLUTKI
No. 28203
LICENSED
PROFESSIONAL ENGINEER

PROPOSED RETAIL DEVELOPMENT

580 LAKE ROAD

ANDOVER, TOLLAND COUNTY, CONNECTICUT

REVISIONS		
No.	Date	Desc.
1.	12/10/2021	REVISED PER HEALTH DEPARTMENT COMMENTS

Designed	S.E.L.
Drawn	Z.T.Z.
Reviewed	J.A.B.
Scale	1"=20'
Project No.	2101726
Date	11/18/2021
CAD File: TT210172601	

Title

TRUCK TURN PLAN (WB-67)

Sheet No.

TT-1

12/9/2021, SEAGERE, G:\JOBS\21\01726\DWG\TT210172601.DWG, TT-1 24X36.DWG

Xref (s): BD210172601; XC210172601; XY210172601

© 2021 BL COMPANIES, INC. THESE DRAWINGS SHALL NOT BE UTILIZED BY ANY PERSON, FIRM OR CORPORATION WITHOUT THE SPECIFIC WRITTEN PERMISSION OF BL COMPANIES.

FOR PERMITTING PURPOSES ONLY
NOT RELEASED FOR CONSTRUCTION

REFER TO SHEET GN-1 FOR
SITE WORK GENERAL NOTES

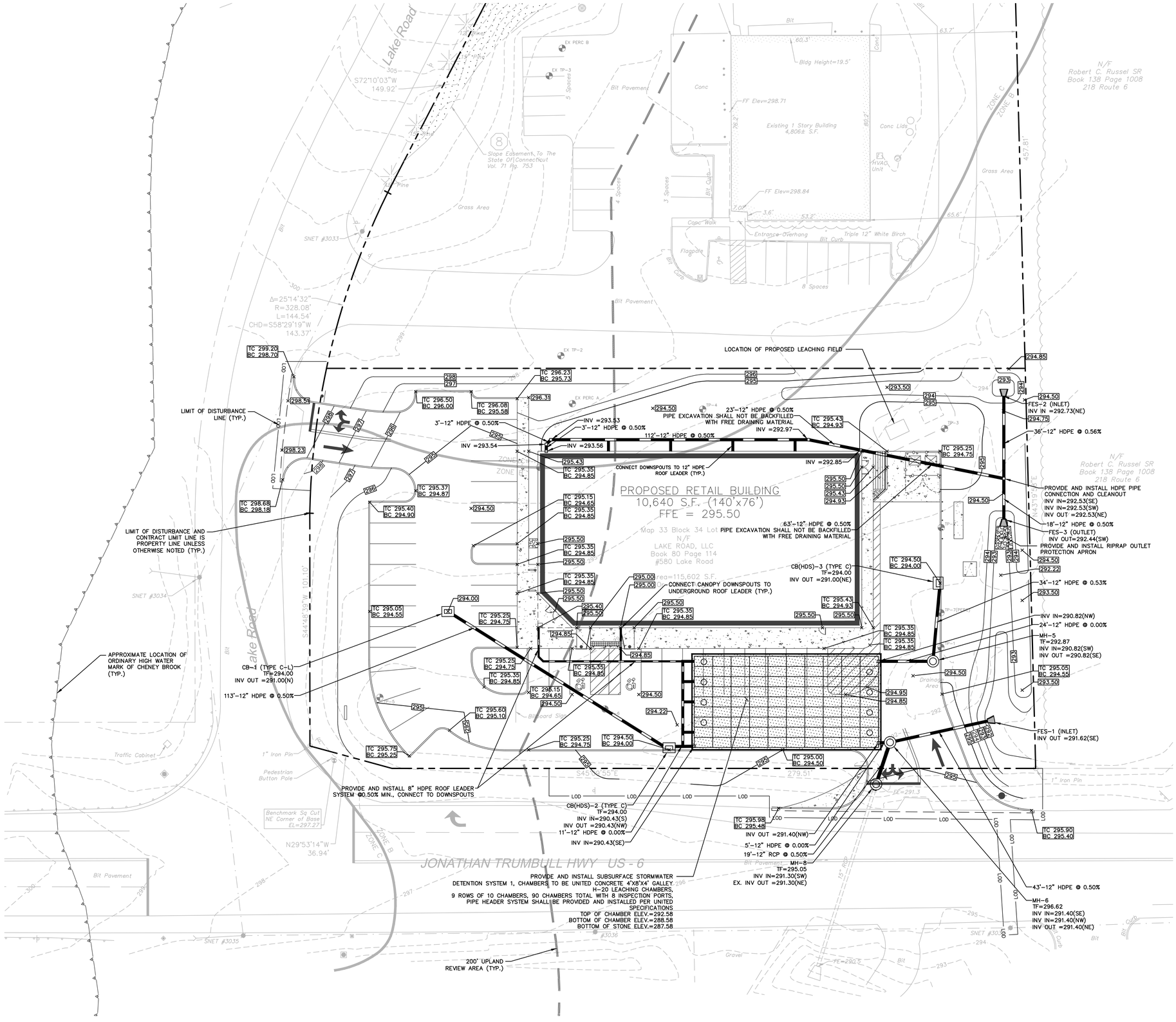

GRADING AND DRAINAGE LEGEND

- PROPERTY LINE
- LOD — LIMIT OF DISTURBANCE AND SITEWORK CONTRACK LIMIT LINE
- SAWCUT LINE
- STORM LINE
- MANHOLE
- CATCH BASIN
- YARD DRAIN
- 100 — PROPOSED CONTOUR LINE
- ×100.00 TC 100.50 BC 100.00 — PROPOSED SPOT GRADE

SPOT GRADE ABBREVIATIONS
BC BOTTOM OF CURB
TC TOP OF CURB
MEX MEET EXISTING CONDITION

NOTE:
ALL CATCH BASINS SHALL HAVE HOODED OUTLETS AND A MIN. 4' SUMP

Architecture
Engineering
Environmental
Land Surveying
BL Companies
100 Constitution Plaza, 10th Floor
Hartford, CT 06103
(860) 249-2200
(860) 249-2400 Fax

STATE OF CONNECTICUT
JAMES A. BOSCO
No. 19203
LICENSED
PROFESSIONAL ENGINEER

PROPOSED RETAIL DEVELOPMENT
580 LAKE ROAD
ANDOVER, TOLLAND COUNTY, CONNECTICUT

Desc.: REVISED PER HEALTH DEPARTMENT COMMENTS

REVISIONS		
No.	Date	
1.	12/10/2021	

Designed	S.E.L.
Drawn	Z.T.Z.
Reviewed	J.A.B.
Scale	1"=20'
Project No.	2101726
Date	11/18/2021
CAD File: GD210172601	

Title
GRADING AND DRAINAGE PLAN

Sheet No.
GD-1

Xref(s): BD210172601; XC210172601; XC210172604; XC210172602; XC210172604

© 2021 BL COMPANIES, INC. THESE DRAWINGS SHALL NOT BE UTILIZED BY ANY PERSON, FIRM OR CORPORATION WITHOUT THE SPECIFIC WRITTEN PERMISSION OF BL COMPANIES.

FOR PERMITTING PURPOSES ONLY
NOT RELEASED FOR CONSTRUCTION

REFER TO SHEET GN-1 FOR SITE WORK GENERAL NOTES

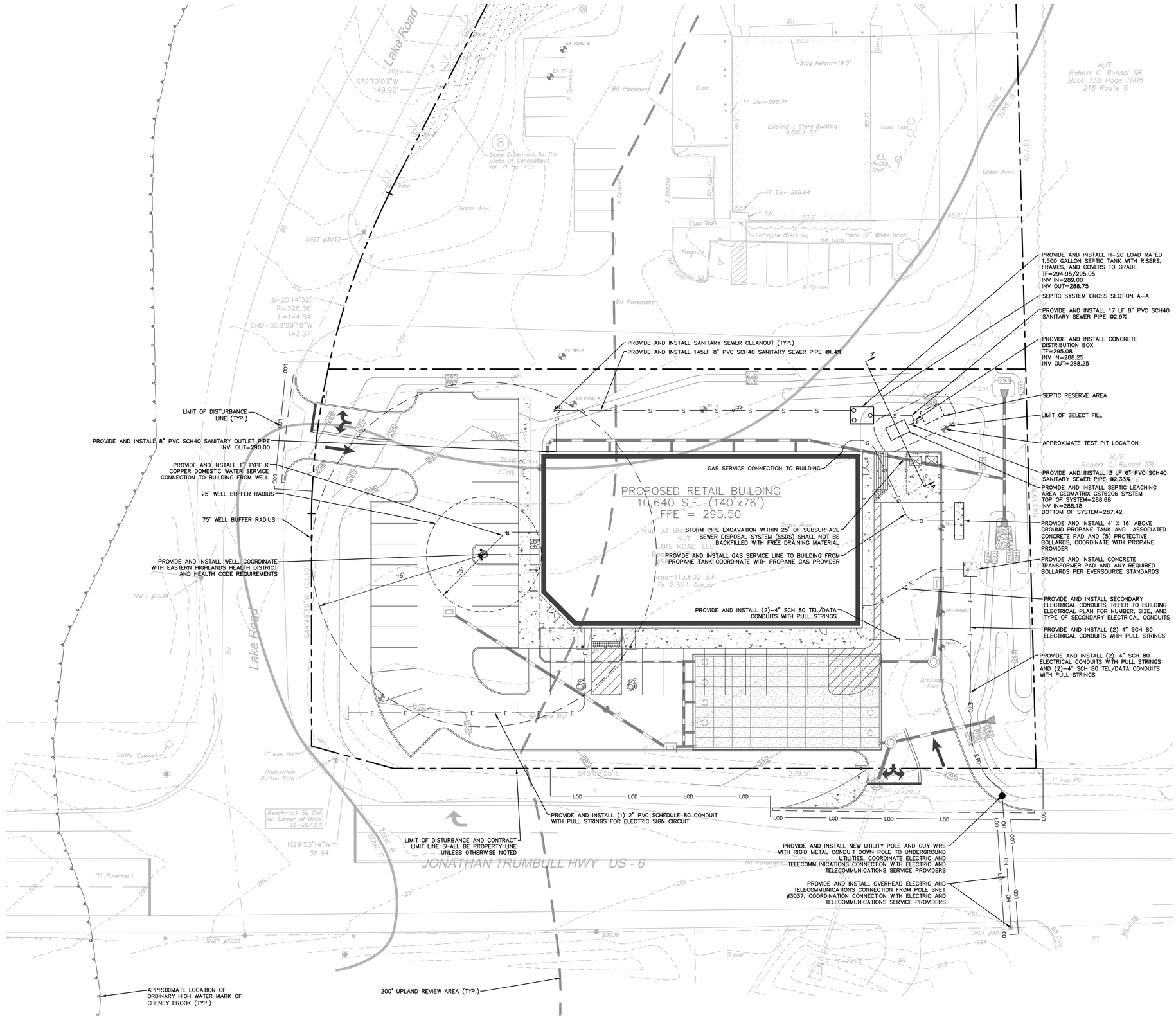

SITE UTILITIES LEGEND

	PROPERTY LINE
LOD	LIMIT OF DISTURBANCE AND SITEWORK CONTRACT LIMIT LINE
	SAWCUT LINE
E	ELECTRIC LINE
G	GAS LINE
W	WATER LINE
S	SANITARY SEWER LINE
T	TELECOMMUNICATIONS LINE
ETC	ELECTRIC AND TELECOMMUNICATIONS LINE
	STORMWATER PIPE

GRAPHIC SCALE
20 10 0 20
SCALE IN FEET

Architecture
Engineering
Environmental
Land Surveying
BL Companies
100 Constitution Plaza, 10th Floor
Hartford, CT 06103
(860) 249-2200
(860) 249-2400 Fax

STATE OF CONNECTICUT
SCOTT E. LEWIS
No. 28223
LICENSED
PROFESSIONAL ENGINEER

PROPOSED RETAIL DEVELOPMENT
580 LAKE ROAD
ANDOVER, TOLLAND COUNTY, CONNECTICUT

Desc.
REVISED PER HEALTH DEPARTMENT COMMENTS

REVISIONS

No.	Date
1.	12/10/2021

Designed	S.E.L.
Drawn	Z.T.Z.
Reviewed	J.A.B.
Scale	1"=20'
Project No.	2101726
Date	11/18/2021
CAD File: SU2101726	

Title
SITE UTILITIES PLAN

Sheet No.
SU-1

Xref(s): IB02101726.01 ; XC210172601 ; XC210172602 ; XC210172604

12/10/2021, SEELEBRC, G:\JOBS\21-01-2101726\DWG\SU2101726\01.DWG, SU-1 ARCH-20SC

© 2021 BL COMPANIES, INC. THESE DRAWINGS SHALL NOT BE UTILIZED BY ANY PERSON, FIRM OR CORPORATION WITHOUT THE SPECIFIC WRITTEN PERMISSION OF BL COMPANIES.

FOR PERMITTING PURPOSES ONLY
NOT RELEASED FOR CONSTRUCTION

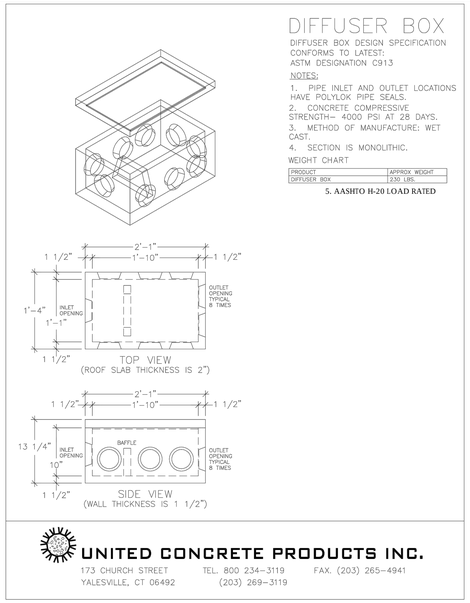

CONCRETE DISTRIBUTION BOX

N.T.S

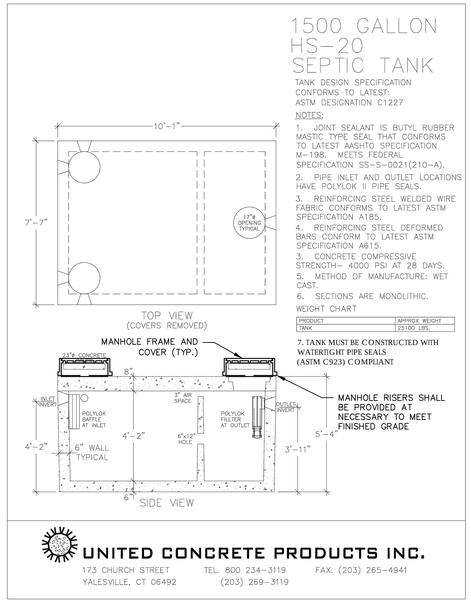

1,500 GALLON SEPTIC TANK

N.T.S

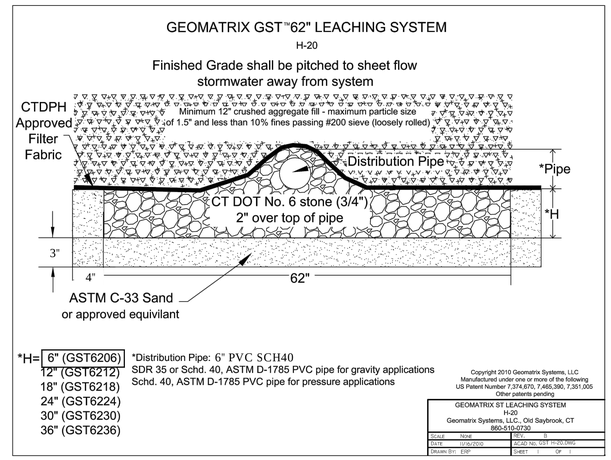

GEOMATRIX GST6206 LEACHING SYSTEM SECTION

N.T.S

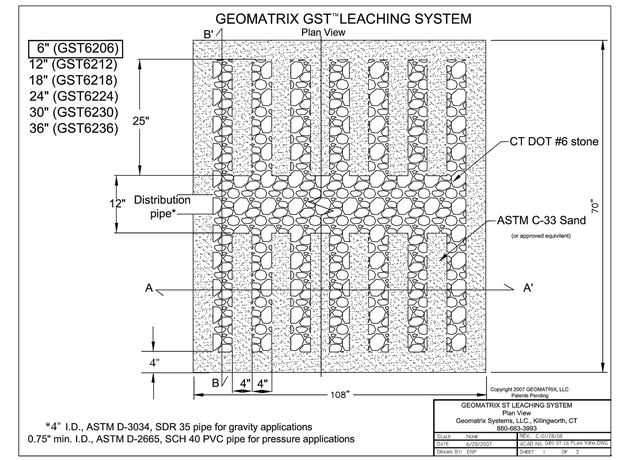

GEOMATRIX GST6206 LEACHING SYSTEM TYPICAL LAYOUT

N.T.S

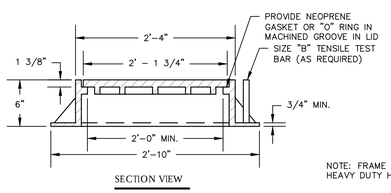

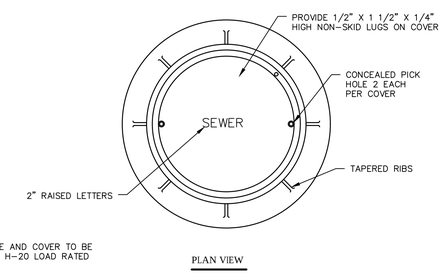

NOTE: FRAME AND COVER TO BE HEAVY DUTY H–20 LOAD RATED

SEPTIC SYSTEM MANHOLE FRAME AND COVER

N.T.S

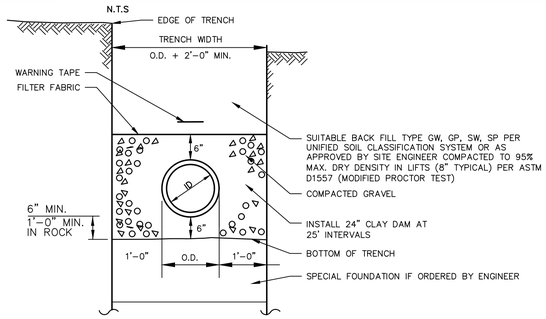

TYPICAL SEPTIC PIPING SECTION
BUILDING TO TANK, TANK TO D-BOX

N.T.S.

1. The select fill shall not contain any material larger than the three (3) inch sieve.
2. Up to 45% of the dry weight of the representative sample may be retained on the #4 sieve. Note: This is the gravel portion of the sample.
3. The material that passes the #4 sieve is then reweighed and the sieve analysis started.
4. The remaining sample shall meet the following gradation criteria:

	PERCENT PASSING	
SIEVE SIZE	WET SIEVE	DRY SIEVE
#4	100	100
#10	70 - 100	70 - 100
#40	10 – 50*	10 - 75
#100	0 - 20	0 - 5
#200	0 - 5	0 - 2.5

* Percent passing the #40 sieve can be increased to no greater than 75% if the percent passing the #100 sieve does not exceed 10% and the #200 sieve does not exceed 5%.

Select fill that does not meet the dry sieve gradation criteria but meets the wet sieve gradation criteria is acceptable. Sieve testing of select fill is required for large (2,000 GPD or greater) systems whenever the leaching system is located totally in select fill. The local director of health may require sieve testing of select fill on less than 2,000 GPD sewage systems in accordance with PHC Section 19-13-B103e (d) (6). The licensed installer is responsible for preparing the leaching area with necessary select fill. The topsoil in the leaching system area must be removed and the subsoil scarified prior to select fill placement unless otherwise directed by the design engineer. The installer shall take the necessary steps to protect the underlying naturally occurring soil from over compaction or damage. The installer is responsible for properly compacting select fill to facilitate construction and to prevent settling. Select fill shall extend a minimum of five (5) feet laterally in all directions beyond the outer perimeter of the leaching system.

SELECT FILL

CONSTRUCTION NOTES

1. INSTALLATION OF THE SYSTEM MUST BE SUPERVISED BY ENGINEER. ENGINEER SHALL INSPECT TANK EXCAVATION, PLACEMENT OF TANKS AND VERIFY ALL INVERTS OF THE TANK PRIOR TO BACKFILL.
2. DURING TANK INSTALLATION, RELOCATE ANY EXPOSED UTILITIES TO MORE THAN 5 FEET FROM THE TANK AS PER TABLE 1 IN THE CT PUBLIC HEALTH CODE.
3. NO FOOTING DRAINS WILL BE INSTALLED WITHIN 25' OF THE PROPOSED SUBSURFACE SEWAGE DISPOSAL SYSTEM.
4. SUBSURFACE SEWAGE DISPOSAL SYSTEM TO BE INSTALLED LEVEL, WITH NO CHANGE IN ELEVATION OR SLOPE ACROSS THE DISPOSAL FIELD.

TANK MAINTENANCE SCHEDULE

1. FOLLOWING INSTALLATION THE SEPTIC TANK SHALL BE PUMPED OUT QUARTERLY TO START. THE THICKNESS OF ACCUMULATED FLOATABLES AND SOLIDS SHALL BE DETERMINED AND RECORDED AT PUMP OUT. FOLLOWING THE FIRST YEAR THE ENGINEER SHALL REVIEW THE ACCUMULATION AND REVISE THE MAINTENANCE SCHEDULE.

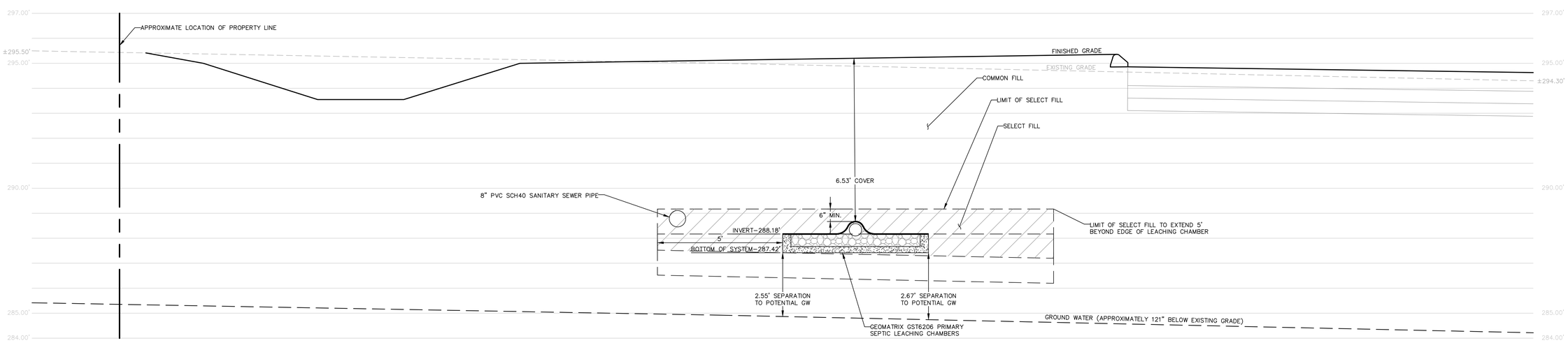

SEPTIC SYSTEM CROSS SECTION (SECTION A-A)

1/2"=1'

Architecture
Engineering
Environmental
Land Surveying
BL Companies
100 Constitution Plaza, 10th Floor
Hartford, CT 06103
(860) 249-2200
(860) 249-2400 Fax

STATE OF CONNECTICUT
SCOTT E. LEWIS
LICENSED PROFESSIONAL ENGINEER

PROPOSED RETAIL DEVELOPMENT
580 LAKE ROAD
ANDOVER, TOLLAND COUNTY, CONNECTICUT

REVISIONS

No.	Date	Desc.
1.	12/10/2021	REVISED PER HEALTH DEPARTMENT COMMENTS

Designed	S.E.L.
Drawn	S.E.L.
Reviewed	
Scale	AS NOTED
Project No.	2101726
Date	11/18/2021
CAD File: SS210172601	

Title

SEPTIC SYSTEM DETAILS

Sheet No.

SS-1

Xref(s): BB210172601

12/3/2021, SEELEBRC, (C:\USRS\JAS\2101726\DWG\SS210172601.DWG-SS-1.2A)36.

© 2021 BL COMPANIES, INC. THESE DRAWINGS SHALL NOT BE UTILIZED BY ANY PERSON, FIRM OR CORPORATION WITHOUT THE SPECIFIC WRITTEN PERMISSION OF BL COMPANIES.

FOR PERMITTING PURPOSES ONLY
NOT RELEASED FOR CONSTRUCTION

Consumption Statement For: DOLLAR GENERAL CORPORATION
Service Address: 2091 WEST STREET
Account : 114440 - 00

Bill Date	Amount Billed	Total Consumption	Meter # 15901995	Meter # None	Meter # None
			Individual Meter Breakdown		
01/01/2019	$262.07	75.00	75.00		
04/01/2019	$35.58	4.00	4.00		
07/01/2019	$37.36	4.00	4.00		
10/01/2019	$40.71	5.00	5.00		
01/01/2020	$37.36	4.00	4.00		
04/01/2020	$37.36	4.00	4.00		
	$450.44	96.00	96.00		

Average Cost Per $ 4.6920833333

Total Service Consumption

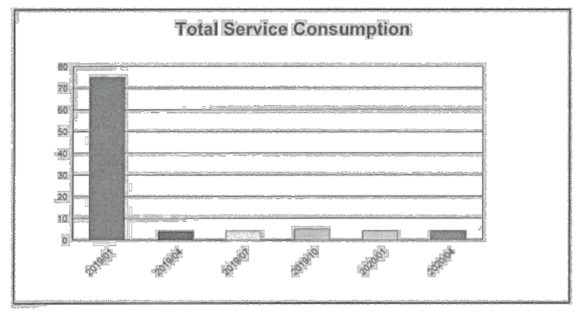

Southington Water Department
PO Box 111 605 West Queen St Southington CT 06489
860-628-5593
Prepared on: 6/25/2020

Consumption Statement For: DOLLAR GENERAL CORPORATION
Service Address: 1724 MERIDEN-WTBY TPKE
Account : 100758 - 00

Bill Date	Amount Billed	Total Consumption	Meter # 18112686	Meter # None	Meter # None
			Individual Meter Breakdown		
01/01/2018	$28.23	2.00	2.00		
10/01/2018	$772.47	235.00	235.00	*Became Dollar General 1/2019	
01/01/2019	$258.88	74.00	74.00		
04/01/2019	$35.58	4.00	4.00		
07/01/2019	$37.36	4.00	4.00		
10/01/2019	$40.71	5.00	5.00		
01/01/2020	$37.36	4.00	4.00		
04/01/2020	$30.66	2.00	2.00		
	$1,241.25	330.00	330.00		

Average Cost Per $ 3.7613636364

Total Service Consumption

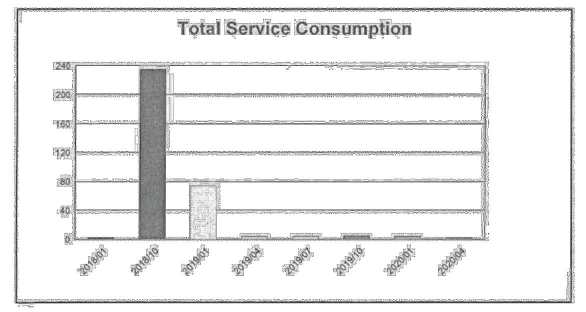

Southington Water Department
PO Box 111 605 West Queen St Southington CT 06489
860-628-5593
Prepared on: 6/25/2020

1. THE HIGHER AVERAGE QUARTERLY WATER USAGE FROM THE TWO SIMILAR ESTABLISHMENTS AS OBSERVED ABOVE IS 4.2 CENTUM CUBIC FEET (CCF). 4.2 CCF PER QUARTER EQUATES TO 34.4 GALLONS PER DAY

13302 - Torrington, CT
Cost & Usage Monthly Report

Water-Wastewater (Gallons)				
Date	IP Percent	Volume	Cost	Unit Cost
05/2016	100%	1,437	$ 30	$ 0.021
06/2016	100%	1,437	$ 30	$ 0.021
07/2016	100%	1,437	$ 30	$ 0.021
08/2016	100%	1,553	$ 31	$ 0.02
09/2016	100%	1,553	$ 31	$ 0.02
10/2016	100%	1,553	$ 31	$ 0.02
11/2016	100%	1,402	$ 30	$ 0.021
12/2016	100%	1,402	$ 30	$ 0.021
01/2017	100%	1,402	$ 30	$ 0.021
02/2017	100%	1,647	$ 32	$ 0.019
03/2017	100%	1,647	$ 32	$ 0.019
04/2017	100%	1,647	$ 32	$ 0.019
Total		**18,117**	**$ 369**	**$ 0.02**

18,117 gallons/365 days = 49.6 gallons/day

WATER USAGE DATA

BL Project # 2101726
Proposed Retail
11/16/2021
Calculated By: S.E.L.
Checked By: K.M.M.

Septic Design Worksheet for Proposed Retail
580 Lake Road -Andover, CT

input for all calculation
input for MLSS calculation only

Design Flows (Table 4)

Use (Table 4)	GPD/sf			GPD
Water Data*				50
				1.5 Safety Factor
				75

* Water data from existing retail developments of same tenant used as design flow.

Square Feet of Effective Area Required (Table 8)

Percolation Rate (Minutes to Drop One Inch)	Application Rate (Gallons per day per square foot of Effective Leaching Area)
Less than 10.1	1.5
10.1 to 20.0	1.2
20.1 to 30.0	0.9
30.1 to 45.0	0.7
45.1 to 60.0	0.6

75.000 Design Flow (from Table 4 above)
1.5 Application Rate (from Table 8 above or page 43 of CT PHC)
Required ELA = 50

MLSS Calculation

MLSS (in feet) = HF x FF x PF
HF (hydraulic factor) 30.000 Refer to HF Table, Test pits to determine
FF (flow factor) 0.25
PF (percolation factor) 1.000 Page 60

Hydraulic Factor (HF)

Depth To Restrictive Layer (inches)	Hydraulic Gradient <1	1.0-2.0	2.1-3.0	3.1-4.0	4.1-6.0	6.1-8.0	8.1-10.0	10.1-15.0	>15.0
<17.9	Cannot Be Approved Unless Hydraulic Analysis Demonstrates Suitability								
18-22.0	72	62	54	48	42	34	30	28	26
22.1-26.0	66	56	48	42	34	30	28	26	24
26.1-30.0	56	49	42	34	30	28	26	24	20
30.1-36.0	48	42	34	30	28	26	24	20	18
36.1-42.0	42	36	30	28	26	24	20	18	16
42.1-48.0	36	32	28	26	24	20	18	16	14
48.1-60.0	30	28	24	22	20	18	16	14	10
>60.0	MLSS Need Not Be Considered								

\\blcompanies.com\dfs\proj\JOBS21\16\2101726\ENG-TECH\CIVIL\SEPTIC\C-DAT-2101726-Septic Design.xls Page 1

Flow Factor (FF)
=Design Flow/300

Percolation Rate	PF
up to 10 min/inch	1
10.1 to 20.0 min/inch	1.25
20.1 to 30.0 min/inch	1.5
30.1 to 45.0 min/inch	3.0, or 2.0*
45.1 to 60 min/inch	5.0, or 3.0*

* If leaching system is entirely in select fill and the bottom of the system is above existing grade and at least 24" above maximum groundwater.

Required MLSS (in feet) = 7.5 Proposed MLSS (in feet)= 8.7

Proposed Leaching System

	Products	Unit Height (inches)	Distance to Center (feet)	Unit Length (feet)	Unit Width (feet)	Effective Leaching Credit (SF/ LF)	Required Length (feet)	Center to Center Spacing (feet)
GST	GeoMatrix GST6206	6	0.67	0.67	5.17	5.9	8.48	12

Unit GST
Unit Length 0.67 feet
Unit Width 5.17 feet
Effective Leaching Area 5.9 square feet/ linear foot
Required Length 8 feet

GST 13 units @ 0.67 ft per unit = 8.67 feet (effective length)
9.0 feet with border sand

Effective Leaching Area = 51.13 Square Feet

Proposed	51.13	SF ≥	Required	50

Reserve Required without MLSS (Section VIII(A), New System and Code Complying Area)

GST 13 units @ 0.67 ft per unit = 8.67 feet (effective length)
9.0 feet with border sand
Effective Leaching Area = 51.13 Square Feet

Proposed	51.13	SF ≥	Required	50

Calculations and tables based on "Connecticut Public Health Code: Regulations and Technical Standards for Subsurface Sewage Disposal System" Effective August 16, 1982 and Last Revised January 1, 2018.

\\blcompanies.com\dfs\proj\JOBS21\16\2101726\ENG-TECH\CIVIL\SEPTIC\C-DAT-2101726-Septic Design.xls Page 2

SEPTIC SYSTEM DESIGN CALCULATIONS

Percolation Test Data
580 Lake Road - Andover, CT

Percolation test performed on October 13, 2021 By: Sarah LeClerc

Elapsed Time (Min.)	Depth (ft)	Change in Depth (in.)	Rate (min/inch)
	Perc Test for BL TP-7 (15' from TP-1) Depth = 5'6" below grade		
0	0.00		
		1.20	0.83
1	0.10		
		1.20	0.83
2	0.20		
		0.84	1.19
3	0.27		
		0.84	1.19
4	0.34		
		0.84	1.19
5	0.41		
		0.60	1.67
6	0.46		
		0.36	2.78
7	0.49		
		0.60	1.67
8	0.54		
		0.48	2.08
9	0.58		
		0.24	4.17
10	0.60		
		0.36	2.78
11	0.63		
		0.24	4.17
12	0.65		
		0.36	2.78
13	0.68		
		0.24	4.17
14	0.70		
		0.24	4.17
15	0.72		
		0.24	4.17
16	0.74		
		0.12	8.33
17	0.75		
		0.12	8.33
18	0.76		
		0.24	4.17
19	0.78		
		0.24	4.17
20	0.80		
		0.12	8.33
21	0.81		
		0.24	4.17
22	0.83		
		0.12	8.33
23	0.84		
		0.12	8.33
24	0.85		
		0.12	8.33
25	0.86		
		0.24	4.17
26	0.88		

Slowest rate = 8.33 min/in
Hole Presoaked Prior to Test (11:36 AM - 12:06 PM) 30 min.
Hole Dia.= 7"
Hole Depth= 18"

C-TST-2101726-Perc Tests-2021-10-13.xls

PERCOLATION TEST DATA

TP-1
BL Project #2101726
October 13, 2021

580 Lake Road, Andover, CT

TEST PIT FIELD LOG

PERSONNEL PRESENT	EXCAVATION EQUIPMENT	
Sarah LeClerc - BL Companies	Contractor Suhoski Operator Make Model CAT Bucket Capacity Reach	Ground Surface Elevation 292.10 Datum NAVD 88 Temperature 55-70 Weather Foggy/Partly Cloudy

Depth	SOIL DESCRIPTION	Excav. Effort	Cobble and Boulder Data	Remark No.
0"-17"	Topsoil	E		
17"-30"	Orange/Brown Fine Sandy Loam	E		
30"-59"	Brown Sand and Medium/Course Gravel and Cobbles	E	and cobbles	
59"-129"	Brown Medium Sand, Stratified	E	trace cobbles	2
	Bottom of Test Pit at 129"			

REMARKS:
1. Mottling was not observed.
2. Ground water was obseved at 104"
3. Bedrock was not observed.

TEST PIT PLAN North

LEGEND

COBBLES AND BOULDERS		PROPORTIONS USED (QUANTITATIVE TERMS)		QUALITATIVE TERMS	EXCAVATION EFFORT
Size Range Classification	Letter Designation				E - Easy
3" - 12"	Cobble (C)	TRACE (TR)	0-10%	OCCASIONAL	M - Moderate
12" - 24	Small (S)	LITTLE (LI)	10-20%	FEW	D - Difficult
24" - 36"	Medium (M)	SOME (SO)	20-35%	FREQUENT	▼ Observed Depth to Groundwater
36" and Larger	Large (L)	AND	35-50%	NUMEROUS	

355 Research Parkway Meriden, CT 06450 Tel.(203) 630-1406 Fax (203) 630-2615
Architecture § Engineering § Planning § Landscape Architecture § Land Surveying § Environmental Sciences

F:/Jobs01/01c999/Septic System/C-TST-2101726-Test Pit Log-2021-10-13.xls (TP-1)

TP-2
BL Project #2101726
October 13, 2021

580 Lake Road, Andover, CT

TEST PIT FIELD LOG

PERSONNEL PRESENT	EXCAVATION EQUIPMENT	
Sarah LeClerc - BL Companies	Contractor Suhoski Operator Make Model CAT Bucket Capacity Reach	Ground Surface Elevation 292.50 Datum NAVD 88 Temperature 55-70 Weather Foggy/Partly Cloudy

Depth	SOIL DESCRIPTION	Excav. Effort	Cobble and Boulder Data	Remark No.
0"-16"	Topsoil	E		
16"-33"	Orange/Brown Fine Sandy Loam	E		
33"-66"	Brown Sand and Medium/Course Gravel and Cobbles	E	and cobbles	
66"-156"	Brown Medium Sand, Stratified	E	trace cobbles	2
	Bottom of Test Pit at 156"			

REMARKS:
1. Mottling was not observed.
2. Ground water was obseved at 109"
3. Bedrock was not observed.

TEST PIT PLAN North

LEGEND

COBBLES AND BOULDERS		PROPORTIONS USED (QUANTITATIVE TERMS)		QUALITATIVE TERMS	EXCAVATION EFFORT
Size Range Classification	Letter Designation				E - Easy
3" - 12"	Cobble (C)	TRACE (TR)	0-10%	OCCASIONAL	M - Moderate
12" - 24	Small (S)	LITTLE (LI)	10-20%	FEW	D - Difficult
24" - 36"	Medium (M)	SOME (SO)	20-35%	FREQUENT	▼ Observed Depth to Groundwater
36" and Larger	Large (L)	AND	35-50%	NUMEROUS	

355 Research Parkway Meriden, CT 06450 Tel.(203) 630-1406 Fax (203) 630-2615
Architecture § Engineering § Planning § Landscape Architecture § Land Surveying § Environmental Sciences

F:/Jobs01/01c999/Septic System/C-TST-2101726-Test Pit Log-2021-10-13.xls (TP-2)

TP-3
BL Project #2101726
October 13, 2021

580 Lake Road, Andover, CT

TEST PIT FIELD LOG

PERSONNEL PRESENT	EXCAVATION EQUIPMENT	
Sarah LeClerc - BL Companies	Contractor Suhoski Operator Make Model CAT Bucket Capacity Reach	Ground Surface Elevation 294.50 Datum NAVD 88 Temperature 55-70 Weather Foggy/Partly Cloudy

Depth	SOIL DESCRIPTION	Excav. Effort	Cobble and Boulder Data	Remark No.
0"-12"	Topsoil	E		
12"-26"	Orange/Brown Fine Sandy Loam	E		
26"-74"	Brown Sand and Cobbles and Small Boulders	E	d cobbles/boulders	
74"-153"	Brown Medium Sand, Stratified	E	trace cobbles	2
	Bottom of Test Pit at 153"			

REMARKS:
1. Mottling was not observed.
2. Ground water was obseved at 121"
3. Bedrock was not observed.

TEST PIT PLAN North

LEGEND

COBBLES AND BOULDERS		PROPORTIONS USED (QUANTITATIVE TERMS)		QUALITATIVE TERMS	EXCAVATION EFFORT
Size Range Classification	Letter Designation				E - Easy
3" - 12"	Cobble (C)	TRACE (TR)	0-10%	OCCASIONAL	M - Moderate
12" - 24	Small (S)	LITTLE (LI)	10-20%	FEW	D - Difficult
24" - 36"	Medium (M)	SOME (SO)	20-35%	FREQUENT	▼ Observed Depth to Groundwater
36" and Larger	Large (L)	AND	35-50%	NUMEROUS	

355 Research Parkway Meriden, CT 06450 Tel.(203) 630-1406 Fax (203) 630-2615
Architecture § Engineering § Planning § Landscape Architecture § Land Surveying § Environmental Sciences

F:/Jobs01/01c999/Septic System/C-TST-2101726-Test Pit Log-2021-10-13.xls (TP-3)

TEST PIT LOGS

Architecture
Engineering
Environmental
Land Surveying

BL Companies

100 Constitution Plaza, 10th Floor
Hartford, CT 06103
(860) 249-2200
(860) 249-2400 Fax

STATE OF CONNECTICUT KIMBERLY M MASKA No. 0026023 LICENSED PROFESSIONAL ENGINEER

PROPOSED RETAIL DEVELOPMENT
580 LAKE ROAD
ANDOVER, TOLLAND COUNTY, CONNECTICUT

REVISIONS No.	Date	Desc.
1.	12/10/2021	REVISED PER HEALTH DEPARTMENT COMMENTS

Designed S.E.L.
Drawn S.E.L.
Reviewed
Scale NONE
Project No. 2101726
Date 11/18/2021
CAD File: SS210172601

Title
SEPTIC SYSTEM DETAILS

Sheet No.
SS-2

Xref (s): ; BD210172601

12/10/2021, SLECLERC, G:\JOBS21\16\2101726\DWG\SS210172601.DWG,SS-2 24X36.

© 2021 BL COMPANIES, INC. THESE DRAWINGS SHALL NOT BE UTILIZED BY ANY PERSON, FIRM OR CORPORATION WITHOUT THE SPECIFIC WRITTEN PERMISSION OF BL COMPANIES.

FOR PERMITTING PURPOSES ONLY
NOT RELEASED FOR CONSTRUCTION

REFER TO SHEET EC-2 FOR SEDIMENT AND EROSION CONTROL NOTES

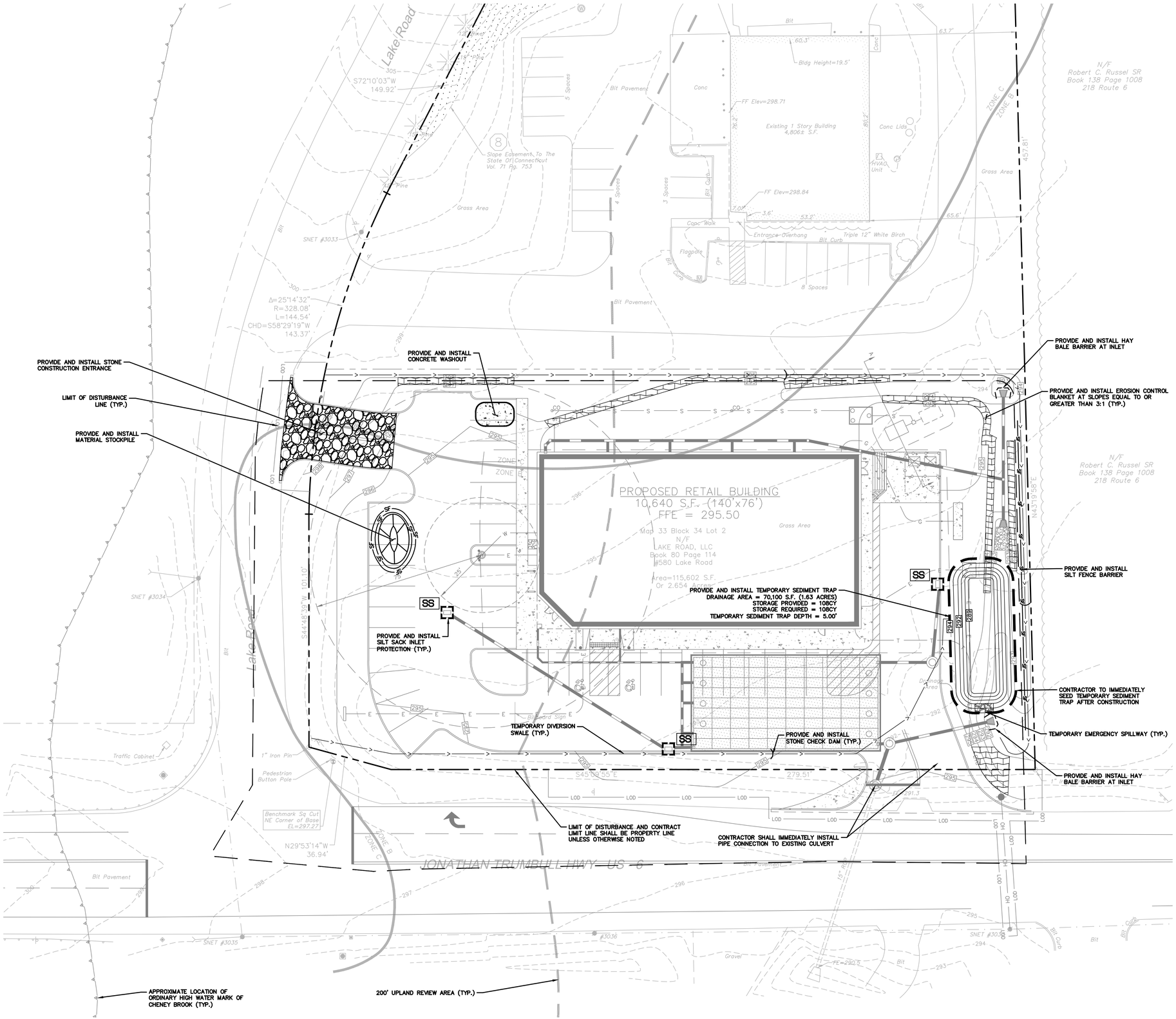

EROSION CONTROL LEGEND

	PROPERTY LINE
LOD	LIMIT OF DISTURBANCE AND SITEWORK CONTRACT LIMIT LINE
	SAWCUT LINE
	TEMPORARY DIVERSION SWALE
	TEMPORARY SEDIMENT TRAP DRAINAGE AREA
SF	SILT FENCE BARRIER
	HAY BALES
SS	SILT SACK INLET PROTECTION
	STONE CHECK DAM
	CONCRETE WASH PIT
SF	TEMPORARY MATERIAL STOCKPILE
	CONSTRUCTION ENTRANCE
	EROSION CONTROL BLANKET

Architecture
Engineering
Environmental
Land Surveying
BL Companies
100 Constitution Plaza, 10th Floor
Hartford, CT 06103
(860) 249-2200
(860) 249-2400 Fax

STATE OF CONNECTICUT
TIMOTHY J. HOLMES
No. 28223
LICENSED
PROFESSIONAL ENGINEER

PROPOSED RETAIL DEVELOPMENT
580 LAKE ROAD
ANDOVER, TOLLAND COUNTY, CONNECTICUT

No.	REVISIONS Date	Desc.
1.	12/10/2021	REVISED PER HEALTH DEPARTMENT COMMENTS

Designed	S.E.L.
Drawn	Z.T.Z.
Reviewed	J.A.B.
Scale	1"=20'
Project No.	2101726
Date	11/18/2021
CAD File: EC210172601	

Title
SEDIMENT AND EROSION CONTROL PLAN

Sheet No.
EC-1

Xref's: BD210172601; XC210172601; XT210172601; XC210172602; XC210172604; XC210172605

12/10/2021, ALEX LEE, G:\1100\21-1100\21-1100-2101726\DWG\EC210172601.DWG\EC-1 24X36.DWG

© 2021 BL COMPANIES, INC. THESE DRAWINGS SHALL NOT BE UTILIZED BY ANY PERSON, FIRM OR CORPORATION WITHOUT THE SPECIFIC WRITTEN PERMISSION OF BL COMPANIES.

FOR PERMITTING PURPOSES ONLY
NOT RELEASED FOR CONSTRUCTION

SEDIMENT AND EROSION CONTROL NOTES

SEDIMENT AND EROSION CONTROL NOTES – CONNECTICUT

SEDIMENT & EROSION CONTROL NARRATIVE
THE SEDIMENT AND EROSION CONTROL PLAN WAS DEVELOPED TO PROTECT THE EXISTING ROADWAY AND STORM DRAINAGE SYSTEMS, ADJACENT PROPERTIES, AND ANY ADJACENT WETLAND AREA AND ANY ADJACENT WATER COURSE FROM SEDIMENT LADEN SURFACE RUNOFF AND EROSION. A CONSTRUCTION SEQUENCE IS PROVIDED TO PROVIDE SURFACE RUNOFF EROSION CONTROLS PRIOR TO THE BEGINNING OF PROJECT DEMOLITION AND/OR CONSTRUCTION.

CONSTRUCTION SCHEDULE
THE ANTICIPATED STARTING DATE FOR CONSTRUCTION IS SPRING 2022 WITH COMPLETION ANTICIPATED FALL 2022. APPROPRIATE SEDIMENT AND EROSION CONTROL MEASURES AS DESCRIBED HEREIN SHALL BE INSTALLED BY THE CONTRACTOR PRIOR TO THE COMMENCEMENT OF ALL DEMOLITION OR CONSTRUCTION ACTIVITY. SCHEDULE WORK TO MINIMIZE THE LENGTH OF TIME THAT BARE SOIL WILL BE EXPOSED.

CONTINGENCY EROSION PLAN
THE CONTRACTOR SHALL INSTALL ALL SPECIFIED SEDIMENT AND EROSION CONTROL MEASURES AND WILL BE REQUIRED TO MAINTAIN THEM IN THEIR INTENDED FUNCTIONING CONDITION. THE AGENTS OF THE MUNICIPALITY SOILS CONSERVATION DISTRICT OR INLAND WETLANDS COMMISSION AND/OR CIVIL ENGINEER SHALL HAVE THE AUTHORITY TO REQUIRE SUPPLEMENTAL MAINTENANCE OR ADDITIONAL MEASURES IF FIELD CONDITIONS ARE ENCOUNTERED BEYOND WHAT WOULD NORMALLY BE ANTICIPATED.

CONSTRUCTION SEQUENCE
THE FOLLOWING CONSTRUCTION SEQUENCE IS RECOMMENDED:

1. CONTACT MUNICIPALITY SOILS CONSERVATION DISTRICT OR INLAND WETLANDS COMMISSION AGENT AT LEAST FORTY–EIGHT (48) HOURS PRIOR TO COMMENCEMENT OF ANY DEMOLITION, CONSTRUCTION OR REGULATED ACTIVITY ON THIS PROJECT.
2. CLEARING LIMITS SHALL BE PHYSICALLY MARKED IN THE FIELD AND APPROVED BY THE MUNICIPALITY SOILS CONSERVATION DISTRICT OR INLAND WETLANDS COMMISSION AGENT PRIOR TO THE START OF WORK ON THE SITE. INSTALL TREE PROTECTION AND PERIMETER SILT FENCE.
3. CONSTRUCT STONE CONSTRUCTION ENTRANCE ANTI–TRACKING PADS AT CONSTRUCTION ENTRANCES/EXITS AND INSTALL FILTER FABRIC AROUND GRATES OF CATCH BASINS OR INSTALL SILT SACKS ON CATCH BASIN INLETS ON OFF SITE ROADS. INSTALL SILT FENCE AND OTHER EROSION CONTROL DEVICES INDICATED ON THESE PLANS AT PERIMETER OF PROPOSED SITE DISTURBANCE AND INSTALL ALL EROSION CONTROL MEASURES AND TREE PROTECTION INDICATED ON THESE PLANS. INSTALL SEDIMENT BASINS AND SEDIMENT TRAPS IF REQUIRED AT LOW AREAS OF SITE OR AS ORDERED BY THE ENGINEER OR AS SHOWN ON THESE PLANS.
4. CLEAR AND GRUB SITE. STOCKPILE CHIPS. STOCKPILE TOPSOIL. INSTALL SEDIMENT AND EROSION CONTROLS AT STOCKPILES.
5. BUILDING AND SITE DEMOLITION AND REMOVAL. PAVEMENT REMOVAL.
6. INSTALL SILT FENCE, CONSTRUCT DIVERSION SWALES AND SEDIMENT TRAPS. COMMENCE INSTALLATION OF STORM DRAINAGE SYSTEM.
7. COMMENCE EARTHWORK. CONSTRUCT FILL SLOPE AND INSTALL ADDITIONAL SEDIMENT AND EROSION CONTROLS AS WORK PROGRESSES AND CONTINUE STORM DRAINAGE SYSTEM CONSTRUCTION, TOPSOIL AND SEED SLOPES WHICH HAVE ACHIEVED FINAL SITE GRADING.
8. CONSTRUCTION STAKING OF ALL BUILDING CORNERS, UTILITIES, ACCESS DRIVES, AND PARKING AREAS.
9. ROUGH GRADING AND FILLING OF SUBGRADES AND SLOPES.
10. IMMEDIATELY UPON DISCOVERING UNFORESEEN CIRCUMSTANCES POSING THE POTENTIAL FOR ACCELERATED EROSION AND/OR SEDIMENT POLLUTION, THE OPERATOR SHALL IMPLEMENT APPROPRIATE BEST MANAGEMENT PRACTICES TO ELIMINATE THE POTENTIAL FOR ACCELERATED EROSION AND/OR SEDIMENT POLLUTION.
11. BEFORE DISPOSING OF SOIL OR RECEIVING BORROW FOR THE SITE, THE CONTRACTOR MUST PROVIDE EVIDENCE THAT EACH SPOIL OR BORROW AREA HAS A SEDIMENT AND EROSION CONTROL PLAN APPROVED BY THE MUNICIPALITY SOILS CONSERVATION DISTRICT AND/OR INLAND WETLANDS COMMISSION AND WHICH IS BEING IMPLEMENTED AND MAINTAINED. THE CONTRACTOR SHALL ALSO NOTIFY THE MUNICIPALITY SOILS CONSERVATION DISTRICT AND/OR INLAND WETLANDS COMMISSION IN WRITING OF ALL RECEIVING SPOIL AND BORROW AREAS WHEN THEY HAVE BEEN IDENTIFIED.
12. CONTINUE INSTALLATION OF STORM DRAINAGE AS SUBGRADE ELEVATIONS ARE ACHIEVED.
13. BUILDING FOUNDATION SUBGRADE AND PAD SUBGRADE PREPARATION.
14. BUILDING FOUNDATION CONSTRUCTION. BEGIN BUILDING SUPERSTRUCTURE
15. THROUGHOUT CONSTRUCTION SEQUENCE, REMOVE SEDIMENT FROM BEHIND SILT FENCES, HAY BALES AND OTHER EROSION CONTROL DEVICES, AND FROM SEDIMENT BASINS AND SEDIMENT TRAPS AS REQUIRED. REMOVAL SHALL BE ON A PERIODIC BASIS (EVERY SIGNIFICANT RAINFALL OF 0.25 INCH OR GREATER). INSPECTION OF SEDIMENT AND EROSION CONTROL MEASURES SHALL BE ON A WEEKLY BASIS AND AFTER EACH RAINFALL OF 0.25 INCHES OR GREATER. SEDIMENT COLLECTED SHALL BE DEPOSITED AND SPREAD EVENLY UPLAND ON SLOPES DURING CONSTRUCTION.
16. INSTALL SANITARY LATERAL AND UTILITIES. COMPLETE STORM DRAINAGE SYSTEM.
17. INSTALL SITE LIGHTING AND TRASH ENCLOSURE.
18. COMPLETE GRADING TO SUBGRADES AND CONSTRUCT PARKING AREA SUBGRADE.
19. CONSTRUCT CURBS, PAVEMENT STRUCTURE AND SIDEWALKS.
20. CONDUCT FINE GRADING.
21. PAVING OF PARKING AREAS AND DRIVEWAYS
22. FINAL FINE GRADING OF SLOPE AND NON–PAVED AREAS.
23. PLACE 4" TOPSOIL ON SLOPES AFTER FINAL GRADING IS COMPLETED. FERTILIZE SEED AND MULCH. SEED MIXTURE TO BE INSTALLED APRIL 15 – JUNE 1 USE EROSION CONTROL BLANKETS AS REQUIRED OR ORDERED FOR SLOPES GREATER THAN 3:1 AND AS SHOWN ON LANDSCAPE PLANS OR EROSION CONTROL PLANS. FOR TEMPORARY STABILIZATION BEYOND SEEDING DATES USE ANNUAL RYE AT 4.0 LBS/1,000 S.F. FERTILIZE WITH 10–10–10 AT 1.0 LBS. OF NITROGEN PER 1,000 S.F. AND LIME AT 100 LBS/1,000 S.F. (MAX.).
24. LANDSCAPE ISLANDS, INTERIOR NON–PAVED AREAS, AND PERIMETER AREAS.
25. INSTALL SIGNING AND PAVEMENT MARKINGS
26. CLEAN STORM DRAINAGE PIPE STRUCTURES, DETENTION SYSTEMS AND WATER QUALITY DEVICES OF DEBRIS AND SEDIMENT.
27. UPON DIRECTION OF THE MUNICIPALITY SOILS CONSERVATION DISTRICT AND/OR INLAND WETLANDS COMMISSION AGENT, SEDIMENT AND EROSION CONTROL MEASURES SHALL BE REMOVED FOLLOWING STABILIZATION OF THE SITE.

OPERATION REQUIREMENTS

CLEARING AND GRUBBING OPERATIONS
1. ALL SEDIMENT AND EROSION CONTROL MEASURES, INCLUDING THE CONSTRUCTION OF TEMPORARY SEDIMENTATION BASINS AND STONE CONSTRUCTION ENTRANCE ANTI–TRACKING PADS, WILL BE INSTALLED PRIOR TO THE START OF CLEARING AND GRUBBING AND DEMOLITION OPERATIONS.
2. FOLLOWING INSTALLATION OF ALL SEDIMENT AND EROSION CONTROL MEASURES, THE CONTRACTOR SHALL NOT PROCEED WITH GRADING, FILLING OR OTHER CONSTRUCTION OPERATIONS UNTIL THE ENGINEER HAS INSPECTED AND APPROVED ALL INSTALLATIONS.
3. THE CONTRACTOR SHALL TAKE EXTREME CARE DURING CLEARING AND GRUBBING OPERATIONS SO AS NOT TO DISTURB UNPROTECTED WETLAND AREAS OR SEDIMENT AND EROSION CONTROL DEVICES.
4. FOLLOWING THE COMPLETION OF CLEARING AND GRUBBING OPERATIONS, ALL AREAS SHALL BE STABILIZED WITH TOPSOIL AND SEEDING OR CRUSHED STONE AS SOON AS PRACTICAL.

ROUGH GRADING OPERATIONS

1. DURING THE REMOVAL AND/OR PLACEMENT OF EARTH AS INDICATED ON THE GRADING PLAN, TOPSOIL SHALL BE STRIPPED AND APPROPRIATELY STOCKPILED FOR REUSE.
2. ALL STOCKPILED TOPSOIL SHALL BE SEEDED, MULCHED WITH HAY, AND ENCLOSED BY A SILTATION FENCE.

FILLING OPERATIONS

1. PRIOR TO FILLING, ALL SEDIMENT AND EROSION CONTROL DEVICES SHALL BE PROPERLY IMPLEMENTED, MAINTAINED AND FULLY INSTALLED, AS DIRECTED BY THE ENGINEER AND AS SHOWN ON THIS PLAN.
2. ALL FILL MATERIAL ADJACENT TO ANY WETLAND AREAS, IF APPLICABLE TO THIS PROJECT, SHALL BE GOOD QUALITY, WITH LESS THAN 5% FINES PASSING THROUGH A #200 SIEVE (BANK RUN), SHALL BE PLACED IN LIFT THICKNESSES NOT GREATER THAN THAT SPECIFIED IN PROJECT SPECIFICATIONS AND/OR THE PROJECT GEOTECHNICAL REPORT. LIFTS SHALL BE COMPACTED TO 95% MAX. DRY DENSITY MODIFIED PROCTOR OR AS SPECIFIED IN THE CONTRACT SPECIFICATIONS OR IN THE GEOTECHNICAL REPORT.
3. AS GENERAL GRADING OPERATIONS PROGRESS, ANY TEMPORARY DIVERSION DITCHES SHALL BE RAISED OR LOWERED, AS NECESSARY, TO DIVERT SURFACE RUNOFF TO THE SEDIMENT BASINS OR SEDIMENT TRAPS.

PLACEMENT OF DRAINAGE STRUCTURES, UTILITIES, AND BUILDING CONSTRUCTION OPERATIONS.

1. SILT FENCES SHALL BE INSTALLED AT THE DOWNHILL SIDES OF BUILDING EXCAVATIONS, MUD PUMP DISCHARGES, AND UTILITY TRENCH MATERIAL STOCKPILES. HAY BALES/STRAW BALES MAY BE USED IF SHOWN ON THE SEDIMENT AND EROSION CONTROL PLANS OR IF DIRECTED BY THE CIVIL ENGINEER.

FINAL GRADING AND PAVING OPERATIONS

1. ALL INLET AND OUTLET PROTECTION SHALL BE PLACED AND MAINTAINED AS SHOWN ON SEDIMENT AND EROSION CONTROL PLANS AND DETAILS, AND AS DESCRIBED IN SPECIFICATIONS AND AS DESCRIBED HEREIN.
2. NO CUT OR FILL SLOPES SHALL EXCEED 2:1 EXCEPT WHERE STABILIZED BY ROCK FACED EMBANKMENTS OR EROSION CONTROL BLANKETS, OR JUTE MESH AND VEGETATION. ALL SLOPES SHALL BE SEEDED, AND ANY ROAD OR DRIVEWAY SHOULDER AND BANKS SHALL BE STABILIZED IMMEDIATELY UPON COMPLETION OF FINAL GRADING UNTIL TURF IS ESTABLISHED.
3. PAVEMENT SUB–BASE AND BASE COURSES SHALL BE INSTALLED OVER AREAS TO BE PAVED AS SOON AS FINAL SUB–GRADES ARE ESTABLISHED AND UNDERGROUND UTILITIES AND STORM DRAINAGE SYSTEMS HAVE BEEN INSTALLED.
4. AFTER CONSTRUCTION OF PAVEMENT, TOPSOIL, FINAL SEED, MULCH AND LANDSCAPING, REMOVE ALL TEMPORARY SEDIMENT AND EROSION CONTROL DEVICES ONLY AFTER ALL AREAS HAVE BEEN PAVED AND/OR GRASS HAS BEEN WELL ESTABLISHED AND THE SITE IS STABLE AND HAS BEEN INSPECTED AND APPROVED BY THE MUNICIPALITY SOILS CONSERVATION DISTRICT AND/OR INLAND WETLANDS COMMISSION.

INSTALLATION OF SEDIMENTATION AND EROSION CONTROL MEASURES

I. SILTATION FENCE
A. DIG A SIX INCH TRENCH ON THE UPHILL SIDE OF THE DESIGNATED FENCE LINE LOCATION.

B. POSITION THE POST AT THE BACK OF THE TRENCH (DOWNHILL SIDE), AND HAMMER THE POST AT LEAST 1.5 FEET INTO THE GROUND.

C. LAY THE BOTTOM SIX INCHES OF THE FABRIC INTO THE TRENCH TO PREVENT UNDERMINING BY STORM WATER RUN–OFF.

D. BACKFILL THE TRENCH AND COMPACT.

II. HAY BALES/STRAW BALES
A. BALES SHALL BE PLACED IN A SINGLE ROW, LENGTHWISE, ORIENTED PARALLEL TO THE CONTOUR, WITH ENDS OF ADJACENT BALES TIGHTLY ABUTTING ONE ANOTHER.

B. BALES SHALL BE ENTRENCHED AND BACKFILLED. A TRENCH SHALL BE EXCAVATED THE WIDTH OF A BALE AND THE LENGTH OF THE PROPOSED BARRIER TO A MINIMUM DEPTH OF FOUR INCHES. AFTER THE BALES ARE STAKED, THE EXCAVATED SOIL SHALL BE BACKFILLED AGAINST THE BARRIER.

C. EACH BALE SHALL BE SECURELY ANCHORED BY AT LEAST TWO (2) STAKES.

D. THE GAPS BETWEEN BALES SHALL BE WEDGED WITH STRAW TO PREVENT WATER LEAKAGE.

E. THE BARRIER SHALL BE EXTENDED TO SUCH A LENGTH THAT THE BOTTOMS OF THE END BALES ARE HIGHER IN ELEVATION THAN THE TOP OF THE LOWEST MIDDLE BALE, TO ENSURE THAT RUN–OFF WILL FLOW EITHER THROUGH OR OVER THE BARRIER, BUT NOT AROUND IT.

OPERATION AND MAINTENANCE OF SEDIMENT AND EROSION CONTROL MEASURES
I. SILTATION FENCE
A. ALL SILTATION FENCES SHALL BE INSPECTED AS A MINIMUM WEEKLY OR AFTER EACH RAINFALL. ALL DETERIORATED FABRIC AND DAMAGED POSTS SHALL BE REPLACED AND PROPERLY REPOSITIONED IN ACCORDANCE WITH THIS PLAN.

B. SEDIMENT DEPOSITS SHALL BE REMOVED FROM BEHIND THE FENCE WHEN THEY REACH A MAXIMUM HEIGHT OF ONE FOOT.

II. HAY BALES/STRAW BALES
A. ALL HAY BALE/STRAW BALE RINGS SHALL BE INSPECTED FOLLOWING EACH RAINFALL. REPAIR OR REPLACEMENT SHALL BE PROMPTLY MADE AS NEEDED.

B. DEPOSITS SHALL BE REMOVED AND CLEANED–OUT IF ONE HALF OF THE ORIGINAL HEIGHT OF THE BALES BECOMES FILLED WITH SEDIMENT.

III. SEDIMENT BASINS/SEDIMENT TRAPS
A. CONTRACTOR TO KEEP WEEKLY CHECKLIST LOGS FOR INSPECTIONS OF ALL SEDIMENT AND EROSION CONTROL DEVICES AND HAVE THEM READILY AVAILABLE ON–SITE AT ALL TIMES FOR INSPECTION BY DEEP, LOCAL AUTHORITIES OR ENGINEER.

B. ALL SEDIMENT BASINS AND/OR SEDIMENT TRAPS SHALL BE INSPECTED FOLLOWING EACH RAINFALL. REPAIR OF SLOPES SHALL BE PROMPTLY MADE AS NEEDED.

C. SEDIMENT DEPOSITS SHALL BE REMOVED FROM SEDIMENT BASINS AND/OR SEDIMENT TRAPS WHEN THEY REACH A MAXIMUM HEIGHT OF ONE FOOT UNLESS OTHERWISE INDICATED ON THE EROSION CONTROL PLANS AND DETAILS TO BE AT A SPECIFIC ELEVATION PER CLEAN OUT MARKERS.

D. SEDIMENT SHALL BE DISPOSED OF ON–SITE OR AS DIRECTED BY THE ENGINEER AND LOCAL GOVERNING OFFICIALS. SEE SEDIMENT AND EROSION CONTROL NOTES HEREIN REGARDING DISPOSAL REQUIREMENTS FOR OFF SITE SPOIL DISPOSAL.

SEDIMENT AND EROSION CONTROL PLAN
1. HAY BALE/STRAW BALE FILTERS WILL BE INSTALLED AT ALL CULVERT OUTLETS IF CULVERT OUTLETS ARE APPLICABLE TO THIS PROJECT AND SILTATION FENCE INSTALLED ALONG THE TOE OF ALL CRITICAL CUT AND FILL SLOPES.
2. CULVERT DISCHARGE AREAS WILL BE PROTECTED WITH RIP RAP CHANNELS. ENERGY DISSIPATORS WILL BE INSTALLED AS SHOWN ON THESE PLANS AND AS NECESSARY.
3. CATCH BASINS WILL BE PROTECTED WITH HAY BALE/STRAW BALE FILTERS, SILT SACKS, SILTATION FENCE, OR OTHER INLET PROTECTION DEVICES PER DETAILS, THROUGHOUT THE CONSTRUCTION PERIOD AND UNTIL ALL DISTURBED AREAS ARE THOROUGHLY STABILIZED.
4. ALL SEDIMENT AND EROSION CONTROL MEASURES WILL BE INSTALLED IN ACCORDANCE WITH THE STANDARDS AND SPECIFICATIONS OF THE 2002 CONNECTICUT GUIDELINES FOR SOIL EROSION AND SEDIMENT CONTROL, LATEST EDITION.
5. SEDIMENT AND EROSION CONTROL MEASURES WILL BE INSTALLED PRIOR TO DEMOLITION AND/OR CONSTRUCTION WHENEVER POSSIBLE.
6. ALL CONTROL MEASURES WILL BE MAINTAINED IN EFFECTIVE CONDITION THROUGHOUT THE DEMOLITION AND CONSTRUCTION PERIOD UNTIL THE SITE IS DETERMINED TO BE STABILIZED BY THE AUTHORITY HAVING JURISDICTION.
7. ADDITIONAL CONTROL MEASURES WILL BE INSTALLED DURING THE CONSTRUCTION PERIOD, IF NECESSARY OR REQUIRED OR AS DIRECTED BY THE CIVIL ENGINEER OR BY THE AUTHORITY HAVING JURISDICTION.
8. SEDIMENT REMOVED FROM EROSION CONTROL STRUCTURES WILL BE DISPOSED IN A MANNER WHICH IS CONSISTENT WITH THE INTENT AND REQUIREMENTS OF THE SEDIMENT AND EROSION CONTROL PLANS, NOTES, AND DETAILS.
9. THE CONTRACTOR IS ASSIGNED THE RESPONSIBILITY FOR IMPLEMENTING THIS SEDIMENT AND EROSION CONTROL PLAN. THIS RESPONSIBILITY INCLUDES THE INSTALLATION AND MAINTENANCE OF CONTROL MEASURES, INFORMING ALL PARTIES ENGAGED ON THE CONSTRUCTION SITE OF THE REQUIREMENTS AND OBJECTIVES OF THE PLAN, NOTIFICATION OF THE MUNICIPALITY SOILS CONSERVATION DISTRICT AND/OR INLAND WETLANDS COMMISSION OFFICE OR AUTHORITY HAVING JURISDICTION OF ANY TRANSFER OF THIS RESPONSIBILITY AND FOR CONVEYING A COPY OF THE SEDIMENT AND EROSION CONTROL PLAN IF THE TITLE TO THE LAND IS TRANSFERRED.

SEDIMENT AND EROSION CONTROL NOTES
1. THE SEDIMENT AND EROSION CONTROL PLAN IS ONLY INTENDED TO DESCRIBE THE SEDIMENT AND EROSION CONTROL TREATMENT FOR THIS SITE. SEE SEDIMENT AND EROSION CONTROL DETAILS AND CONSTRUCTION SEQUENCE. REFER TO SITE PLAN FOR GENERAL INFORMATION AND OTHER CONTRACT PLANS FOR APPROPRIATE INFORMATION.
2. THE CONTRACTOR IS RESPONSIBLE FOR IMPLEMENTING THIS SEDIMENT AND EROSION CONTROL PLAN. THIS RESPONSIBILITY INCLUDES THE PROPER INSTALLATION AND MAINTENANCE OF SEDIMENT AND EROSION CONTROL MEASURES, INFORMING ALL PARTIES ENGAGED WITH CONSTRUCTION ON THE SITE OF THE REQUIREMENTS AND OBJECTIVES OF THIS PLAN, INFORMING THE AUTHORITY HAVING JURISDICTION OR COUNTY SOILS CONSERVATION DISTRICT OR INLAND WETLANDS AGENCY OF ANY TRANSFER OF THIS RESPONSIBILITY, AND FOR CONVEYING A COPY OF THE SEDIMENT & EROSION CONTROL PLAN IF THE TITLE TO THE LAND IS TRANSFERRED.
3. AN EROSION CONTROL BOND MAY BE REQUIRED TO BE POSTED WITH THE MUNICIPALITY TO ENSURE IMPLEMENTATION OF THE SEDIMENT AND EROSION CONTROL MEASURES. THE CONTRACTOR SHALL BE RESPONSIBLE FOR THE POSTING OF THIS BOND AND FOR INQUIRIES TO THE MUNICIPALITY FOR INFORMATION ON THE METHOD, TYPE AND AMOUNT OF THE BOND POSTING UNLESS OTHERWISE DIRECTED BY THE OWNER.
4. VISUAL SITE INSPECTIONS SHALL BE CONDUCTED WEEKLY, AND AFTER EACH MEASURABLE PRECIPITATION EVENT OF 0.25 INCHES OR GREATER BY QUALIFIED PERSONNEL, TRAINED AND EXPERIENCED IN SEDIMENT AND EROSION CONTROL, TO ASCERTAIN THAT THE SEDIMENT AND EROSION CONTROL (E&S) BMPS ARE OPERATIONAL AND EFFECTIVE IN PREVENTING POLLUTION. A WRITTEN REPORT OF EACH INSPECTION SHALL BE KEPT, AND INCLUDE:
A) A SUMMARY OF THE SITE CONDITIONS, E&S BMPS, AND COMPLIANCE; AND
B) THE DATE, TIME, AND THE NAME OF THE PERSON CONDUCTING THE INSPECTION
5. THE CONTRACTOR SHALL CONSTRUCT ALL SEDIMENT AND EROSION CONTROLS IN ACCORDANCE WITH THE 2002 CONNECTICUT GUIDELINES FOR SOIL EROSION AND SEDIMENT CONTROL, LATEST EDITION, IN ACCORDANCE WITH THE CONTRACT DOCUMENTS, AND AS DIRECTED BY THE MUNICIPALITY SOILS CONSERVATION DISTRICT AND/OR INLAND WETLANDS COMMISSION. THE CONTRACTOR SHALL KEEP A COPY OF THE GUIDELINES ON–SITE FOR REFERENCE DURING CONSTRUCTION.
6. ADDITIONAL AND/OR ALTERNATIVE SEDIMENT AND EROSION CONTROL MEASURES MAY BE INSTALLED DURING THE CONSTRUCTION PERIOD IF FOUND NECESSARY BY THE CONTRACTOR, OWNER, SITE ENGINEER, MUNICIPALITY SOILS CONSERVATION DISTRICT AND/OR INLAND WETLANDS COMMISSION, OR GOVERNING AGENCIES. THE CONTRACTOR SHALL CONTACT THE OWNER AND APPROPRIATE GOVERNING AGENCIES FOR APPROVAL IF ALTERNATIVE CONTROLS OTHER THAN THOSE SHOWN ON THE PLANS ARE PROPOSED.
7. THE CONTRACTOR SHALL INSPECT ALL SEDIMENT AND EROSION CONTROLS BEFORE AND AFTER EACH STORM (0.25 INCHES OR GREATER RAINFALL), OR AT LEAST WEEKLY, TO VERIFY THAT THE CONTROLS ARE OPERATING PROPERLY AND MAKE REPAIRS WHERE NECESSARY.
8. THE CONTRACTOR SHALL KEEP A SUPPLY OF SEDIMENT AND EROSION CONTROL MATERIAL (HAY BALES, SILT FENCE, JUTE MESH, RIP RAP, ETC.) ON–SITE FOR MAINTENANCE AND EMERGENCY REPAIRS.
9. PROTECT EXISTING TREES THAT ARE TO BE SAVED BY FENCING AT THE DRIP LINE OR AS SHOWN WITH SNOW FENCE, ORANGE SAFETY FENCE, OR EQUIVALENT FENCING. ANY LIMB TRIMMING SHOULD BE DONE BEFORE CONSTRUCTION BEGINS IN THAT AREA; FENCING SHALL BE MAINTAINED AND REPAIRED DURING CONSTRUCTION.
10. INSTALL PERIMETER SEDIMENT AND EROSION CONTROLS PRIOR TO CLEARING OR CONSTRUCTION. ALL CONSTRUCTION SHALL BE CONTAINED WITHIN THE LIMIT OF DISTURBANCE, WHICH SHALL BE MARKED WITH SILT FENCE, SAFETY FENCE, HAY BALES, RIBBONS, OR OTHER MEANS PRIOR TO CLEARING. CONSTRUCTION ACTIVITY SHALL REMAIN ON THE UPHILL SIDE OF THE SILT FENCE UNLESS WORK IS SPECIFICALLY CALLED FOR ON THE DOWNHILL SIDE OF THE FENCE.
11. STONE CONSTRUCTION ENTRANCE ANTI–TRACKING PADS SHALL BE INSTALLED AT START OF CONSTRUCTION AND MAINTAINED THROUGHOUT THE DURATION OF CONSTRUCTION. THE LOCATION OF THE TRACKING PADS MAY CHANGE AS VARIOUS PHASES OF CONSTRUCTION ARE COMPLETED.
12. TOPSOIL SHALL BE STRIPPED AND STOCKPILED FOR USE IN FINAL LANDSCAPING. ALL EARTH STOCKPILES SHALL HAVE HAY BALES OR SILT FENCE AROUND THE LIMIT OF PILE. PILES SHALL BE TEMPORARILY SEEDED IF PILE IS TO REMAIN IN PLACE FOR MORE THAN ONE (1) MONTH.
13. SEDIMENT BASINS AND SEDIMENT TRAPS SHALL PROVIDE 134 CUBIC YARDS OF SEDIMENT STORAGE PER ACRE CONTRIBUTING TO THE BASIN. PROVIDE BASIN VOLUMES FOR ALL DISTURBANCE ON SITE.
14. COMPLY WITH REQUIREMENTS OF CGS SECTION 22A 430B, FOR STORMWATER DISCHARGE FROM CONSTRUCTION ACTIVITIES AND WITH DEEP RECORD KEEPING AND INSPECTION REQUIREMENTS.
15. STONE CONSTRUCTION ENTRANCE ANTI–TRACKING PADS SHALL BE INSTALLED PRIOR TO ANY ON SITE EXCAVATION AND SHALL BE MAINTAINED DURING ALL DEMOLITION, EXCAVATION AND CONSTRUCTION ACTIVITIES.
16. MINIMIZE LAND DISTURBANCES. SEED AND MULCH DISTURBED AREAS WITH TEMPORARY MIX AS SOON AS PRACTICABLE (ONE WEEK MAXIMUM UNSTABILIZED PERIOD) USING PERENNIAL RYEGRASS AT 40 LBS PER ACRE. MULCH ALL CUT AND FILL SLOPES AND SWALES WITH LOOSE HAY AT A RATE OF 2 TONS PER ACRE. IF NECESSARY, REPLACE LOOSE HAY ON SLOPES WITH EROSION CONTROL BLANKETS OR JUTE CLOTH. MODERATELY GRADED AREAS, ISLANDS, AND TEMPORARY CONSTRUCTION STAGING AREAS MAY BE HYDROSEEDED WITH TACKIFIER.
17. MAINTAIN EXISTING PAVED AREAS FOR CONSTRUCTION STAGING FOR AS LONG AS POSSIBLE.
18. SILT FENCE AND OTHER SEDIMENT AND EROSION CONTROL MEASURES SHALL BE INSTALLED IN ACCORDANCE WITH CONTRACT DRAWINGS AND MANUFACTURER'S RECOMMENDATIONS PRIOR TO WORK IN ANY UPLAND AREAS.
19. EXCAVATED MATERIAL FROM TEMPORARY SILT TRAPS MUST BE STOCKPILED ON UPHILL SIDE OF SILT FENCE.
20. INSTALL SILT FENCE ACCORDING TO MANUFACTURER'S INSTRUCTION, PARTICULARLY, BURY LOWER EDGE OF FABRIC INTO GROUND. SILT FENCE SHALL BE TENCATE ENVIROFENCE, PROPEX GEOTEX OR EQUIVALENT APPROVED BY THE CIVIL ENGINEER. FILTER FABRIC USED SHALL BE TENCATE 140N OR 170N, OR APPROVED EQUIVALENT. SEE SPECIFICATIONS FOR FURTHER INFORMATION.
21. WHERE INDICATED ON SEDIMENT AND EROSION CONTROL PLANS USE NEW HAY/STRAW BALES AND REPLACE THEM WHENEVER THEIR CONDITION DETERIORATES BEYOND REASONABLE USABILITY. STAKE BALES SECURELY INTO GROUND AND BUTT TIGHTLY TOGETHER TO PREVENT UNDERCUTTING AND BYPASSING.
22. INSTALL TEMPORARY DIVERSION DITCHES, PLUNGE POOLS, SEDIMENT BASINS, SEDIMENT TRAPS, CONCRETE WASH PITS AND DEWATERING PITS AS SHOWN AND AS NECESSARY DURING VARIOUS PHASES OF CONSTRUCTION TO CONTROL RUNOFF UNTIL UPHILL AREAS ARE DETERMINED TO BE STABILIZED BY THE AUTHORITY HAVING JURISDICTION. LOCATION OF TEMPORARY SEDIMENT BASINS WILL REQUIRE REVIEW AND APPROVAL BY THE CIVIL ENGINEER AND AUTHORITY HAVING JURISDICTION.
23. DIRECT ALL DEWATERING PUMP DISCHARGE TO A SEDIMENT CONTROL DEVICE SUCH AS TEMPORARY PITS, SEDIMENT TRAP, SEDIMENT BASINS OR GRASS FILTERS WITHIN THE APPROVED LIMIT OF DISTURBANCE. DISCHARGE TO STORM DRAINAGE SYSTEM OR SURFACE WATERS FROM SEDIMENT CONTROLS SHALL BE CLEAR.
24. BLOCK THE OPEN UPSTREAM ENDS OF ANY CULVERTS, DETENTION BASIN/SEDIMENTATION BASIN OUTLET CONTROL ORIFICE UNTIL SITE IS STABILIZED. BLOCK END OF STORM SEWERS IN EXPOSED TRENCHES WITH BOARDS AND SANDBAGS AT THE END OF EACH WORKING DAY WHEN RAIN IS EXPECTED.
25. SWEEP AFFECTED PORTIONS OF OFF SITE ROADS ONE OR MORE TIMES A DAY (OR LESS FREQUENTLY IF TRACKING IS NOT A PROBLEM) DURING CONSTRUCTION. OTHER DUST CONTROL MEASURES TO BE USED AS NECESSARY INCLUDE WATERING DOWN DISTURBED AREAS, USING CALCIUM CHLORIDE, AND COVERING LOADS ON DUMP TRUCKS.
26. PERIODICALLY CHECK ACCUMULATED SEDIMENT LEVELS IN THE SEDIMENT BASINS AND SEDIMENT TRAPS DURING CONSTRUCTION AND CLEAN ACCUMULATED SILT WHEN NECESSARY OR WHEN ONE FOOT OF SEDIMENT HAS ACCUMULATED OR PER SPECIFIC CLEANOUT MARKER ELEVATION. CLEAN ACCUMULATED SEDIMENT FROM CATCH BASIN SUMPS AS NECESSARY AND AS DIRECTED BY THE CIVIL ENGINEER OR OWNER'S CONSTRUCTION REPRESENTATIVE. REMOVE ACCUMULATED SEDIMENT FROM BEHIND HAY/STRAW BALES AND SILT FENCE WHEN LEVEL REACHES HALF THE HEIGHT OF THE BALE OR ONE FOOT AT SILT FENCE. DISPOSE OF SEDIMENT LEGALLY EITHER ON OR OFF SITE.
27. IMMEDIATELY UPON DISCOVERING UNFORESEEN CIRCUMSTANCES POSING THE POTENTIAL FOR ACCELERATED EROSION AND/OR SEDIMENT POLLUTION, THE OPERATOR SHALL IMPLEMENT APPROPRIATE BEST MANAGEMENT PRACTICES TO ELIMINATE THE POTENTIAL FOR ACCELERATED EROSION AND/OR SEDIMENT POLLUTION.
28. ALL PUMPING OF SEDIMENT LADEN WATER SHALL BE THROUGH A SEDIMENT CONTROL BMP, SUCH AS A PUMPED WATER FILTER BAG OR EQUIVALENT SEDIMENT REMOVAL FACILITY, OVER UNDISTURBED VEGETATED AREAS.
29. ALL EXCAVATED MATERIAL SHALL BE PLACED ON THE HIGH SIDE OF UTILITY AND STORM PIPE TRENCHES SO AS TO ALLOW THE TRENCH TO INTERCEPT ALL SILT LADEN RUNOFF.
30. CONTRACTOR SHALL ONLY EXCAVATE AS MUCH UTILITY AND STORM PIPE TRENCH WORK AS CAN BE COMPLETED, BACKFILLED AND STABILIZED IN ONE DAY SO AS TO LIMIT THE AMOUNT OF OPEN, DISTURBED TRENCHING.
31. ANY STOCKPILES OF STRIPPED MATERIALS ARE TO BE PERIODICALLY SPRAYED WITH WATER OR A CRUSTING AGENT TO STABILIZE POTENTIALLY WIND–BLOWN MATERIAL. HAUL ROADS BOTH INTO AND AROUND THE SITE ARE TO BE SPRAYED AS NEEDED TO SUPPRESS DUST. TRUCKS HAULING IMPORT FILL MATERIAL ARE TO BE TARPED TO AID IN THE CONTROL OF AIRBORNE DUST. DURING HIGH WIND EVENTS (20 TO 30 MPH SUSTAINED) CONSTRUCTION ACTIVITY SHALL BE LIMITED OR CEASED IF DUST CANNOT BE CONTROLLED BY WETTING.
32. AN AREA SHALL BE CONSIDERED TO HAVE ACHIEVED FINAL STABILIZATION WHEN IT HAS A MINIMUM OF 70% UNIFORM PERENNIAL VEGETATIVE COVER OR OTHER PERMANENT NON–VEGETATIVE COVER WITH A DENSITY SUFFICIENT TO RESIST ACCELERATED SURFACE EROSION AND SUBSURFACE CHARACTERISTICS SUFFICIENT TO RESIST SLIDING OR OTHER MOVEMENTS UNLESS OTHERWISE DETERMINED BY THE AUTHORITY HAVING JURISDICTION.
33. MAINTAIN ALL PERMANENT AND TEMPORARY EROSION AND SEDIMENT CONTROL DEVICES IN EFFECTIVE CONDITION THROUGHOUT THE CONSTRUCTION PERIOD. UPON COMPLETION OF WORK SWEEP PARKING LOT AND REMOVE ALL TEMPORARY EROSION AND SEDIMENT CONTROLS WHEN AUTHORIZED BY AUTHORITY HAVING JURISDICTION. FILE NOT (NOTICE OF TERMINATION) WITH AUTHORITY HAVING JURISDICTION RESPONSIBLE FOR REGULATING STORM WATER DISCHARGES FROM CONSTRUCTION ACTIVITIES PER NPDES.

Architecture
Engineering
Environmental
Land Surveying

BL Companies

100 Constitution Plaza, 10th Floor
Hartford, CT 06103
(860) 249-2200
(860) 249-2400 Fax

STATE OF CONNECTICUT
KIMBERLY W. MASTO
No. 0028028
LICENSED
PROFESSIONAL ENGINEER

PROPOSED RETAIL DEVELOPMENT
580 LAKE ROAD
ANDOVER, TOLLAND COUNTY, CONNECTICUT

REVISIONS

No.	Date	Desc.
1.	12/10/2021	REVISED PER HEALTH DEPARTMENT COMMENTS

Designed	S.E.L.
Drawn	Z.T.Z.
Reviewed	J.A.B.
Scale	NONE
Project No.	2101726
Date	11/18/2021
CAD File:	EC210172601

Title
SEDIMENT AND EROSION CONTROL NOTES

Sheet No.
EC-2

Xref (s): ; BD210172601 ; XC210172601 ; XY210172601 ; XC210172602 ; XC210172604 ; XC210172605

12/9/2021, SLECLERC, G:\JOBS21\16\2101726\DWG\EC210172601.DWG,EC-2 24X36.

© 2021 BL COMPANIES, INC. THESE DRAWINGS SHALL NOT BE UTILIZED BY ANY PERSON, FIRM OR CORPORATION WITHOUT THE SPECIFIC WRITTEN PERMISSION OF BL COMPANIES.

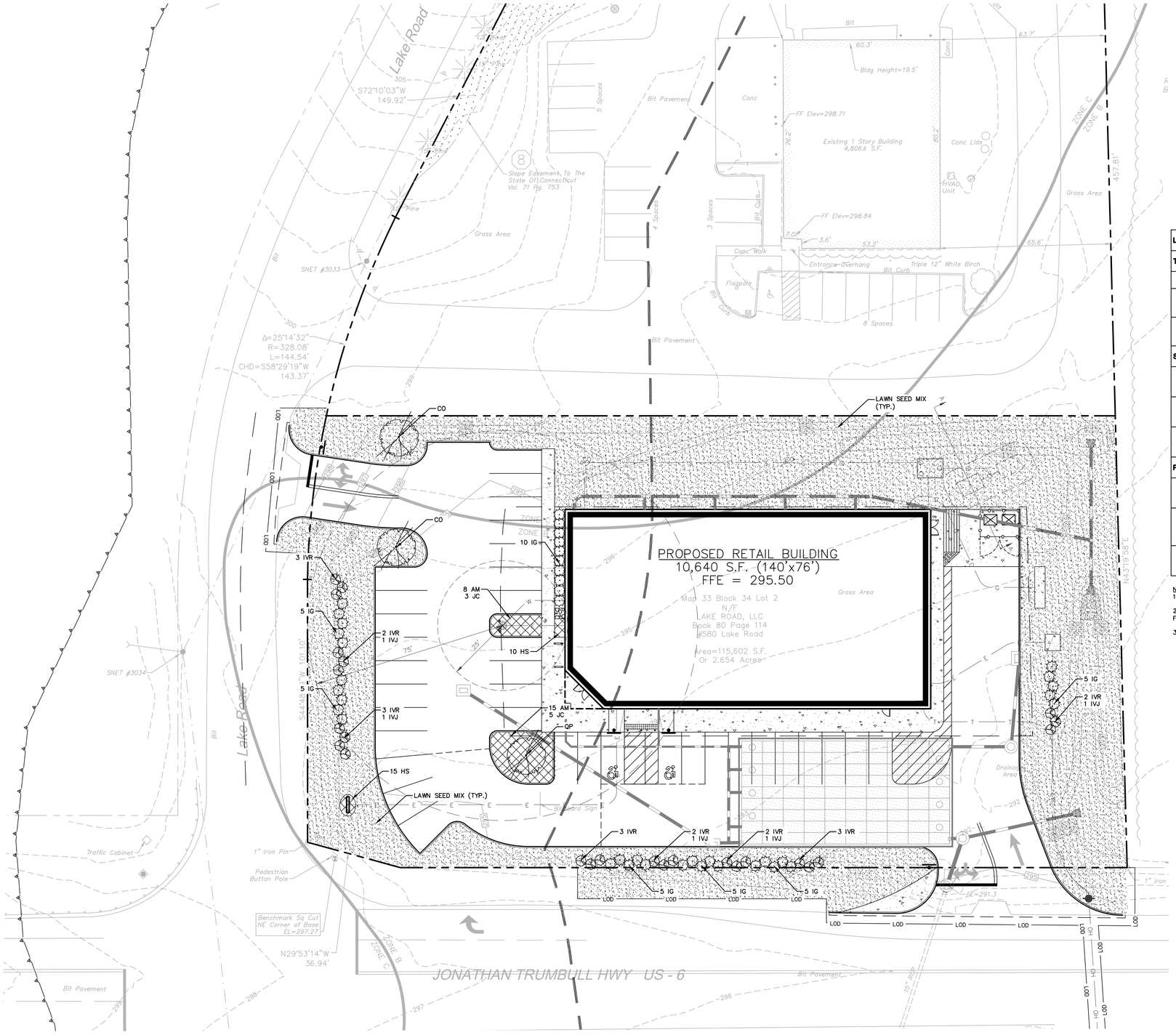

LANDSCAPE ZONING INFORMATION

LOCATION: ANDOVER, TOLLAND COUNTY				
ZONE: INDUSTRIAL (I)				
USE: RETAIL SALES WITHIN A COMPLETELY CLOSED BUILDING (USE PERMITTED BY SITE PLAN REVIEW - PZC MAY HOLD PUBLIC HEARING)*				
ITEM #	**ITEM**	**REQUIREMENTS**	**PROPOSED**	**VARIANCE**
1	LANDSCAPING AND SCREENING (SEC. 23.5D)	ALL PARKING, SERVICE AND STORAGE AREAS SHALL BE REASONABLY SCREENED BY LANDSCAPING OR FENCES/WALLS.	COMPLIES	NO
2	LANDSCAPING AND SCREENING (SEC. 23.5D)	ALL PARKING SHALL INCLUDE LANDSCAPE ISLANDS.	COMPLIES	NO
3	LANDSCAPING AND SCREENING (SEC. 23.5D)	DECIDUOUS TREES SHALL BE 2.5" CAL. MIN./EVERGREEN TREES SHALL BE 6' HT. MIN./ALL SHRUBS TO BE 1/3RD THEIR MATURE HEIGHT.	COMPLIES	NO

LANDSCAPE PLANT SCHEDULE

KEY	QTY	BOTANICAL NAME	COMMON NAME	ROOT	SIZE	COMMENTS
TREES						
CO	2	Celtis occidentalis 'Prairie Pride'	PRAIRIE PRIDE HACKBERRY	B&B	2.5" CAL. MIN.	6' BRANCH HT. MIN.
QP	1	Quercus palustris	PIN OAK	B&B	2.5" CAL. MIN.	6' BRANCH HT. MIN.
SHRUBS						
IG	40	Ilex glabra 'Compacta'	COMPACT INKBERRY	CONT.	24" HT. MIN.	PLANT 4' O.C.
IVR	20	Ilex venticulata 'Red Sprite'	RED SPRITE WINTERBERRY	CONT.	24" HT. MIN.	PLANT 4' O.C.
IVJ	5	Ilex venticulata 'Jim Dandy'	JIM DANDY WINTERBERRY	CONT.	24" HT. MIN.	PLANT 4' O.C.
PERENNIALS AND GROUNDCOVERS						
AM	23	Aronia melanocarpa 'UCONNAM012'	GROUND HUG CHOKEBERRY	CONT.	12" HT. MIN.	PLANT 3' O.C.
HS	25	Hemerocallis sp.	DAYLILY	CONT.	12" HT. MIN.	PLANT 24" O.C./ EQUAL MIX HAPPY RETURNS, CHICAGO APACHE, JOAN SENIOR
JC	8	Juniperus chinensis 'Pfitzeriana Compacta'	COMPACT PFITZER JUNIPER	CONT.	18" HT. MIN.	PLANT 4' O.C.

NOTES:
1) ALL SUBSTITUTIONS MUST RECEIVE APPROVAL FROM THE LANDSCAPE ARCHITECT PRIOR TO DELIVERY TO SITE.

2) PROVIDE AND INSTALL ALL PLANTS SHOWN ON THE PLANTING PLAN DRAWINGS; THE QUANTITIES IN THE PLANT LIST ARE PROVIDED FOR THE CONTRACTOR'S CONVENIENCE ONLY. IF DISCREPANCIES OCCUR, THE LARGER QUANTITY SHALL APPLY.

3) IF THERE IS A DISCREPANCY BETWEEN BOTANICAL AND COMMON NAME, BOTANICAL NAME PREVAILS.

LANDSCAPE LEGEND

PATTERN	DESCRIPTION
	LAWN SEED MIX (REFER TO SEED MIXES ON SHEET LL-2)
	PERENNIALS/GROUNDCOVERS (REFER TO PLANT SCHEDULE THIS PAGE)
	DECIDUOUS CANOPY TREE (REFER TO PLANT SCHEDULE THIS PAGE)
	EVERGREEN SHRUBS (REFER TO PLANT SCHEDULE THIS PAGE)
	DECIDUOUS SHRUBS (REFER TO PLANT SCHEDULE THIS PAGE)

GRAPHIC SCALE
20 10 0 20
SCALE IN FEET

FOR PERMITTING PURPOSES ONLY
NOT RELEASED FOR CONSTRUCTION

REFER TO SHEET LL-2 FOR LANDSCAPE NOTES AND DETAILS

Architecture
Engineering
Environmental
Land Surveying
BL Companies
100 Constitution Plaza, 10th Floor
Hartford, CT 06103
(860) 249-2200
(860) 249-2400 Fax

STATE OF CONNECTICUT
LICENSED PROFESSIONAL ENGINEER

PROPOSED RETAIL DEVELOPMENT
580 LAKE ROAD
ANDOVER, TOLLAND COUNTY, CONNECTICUT

REVISIONS		
No.	Date	Desc.
1.	12/10/2021	REVISED PER HEALTH DEPARTMENT COMMENTS

Designed	L.M.W.
Drawn	L.M.W.
Reviewed	J.A.B.
Scale	1"=20'
Project No.	2101726
Date	11/18/2021
CAD File: LL2101726.01	

Title
LANDSCAPE PLAN

Sheet No.
LL-1

© 2021 BL COMPANIES, INC. THESE DRAWINGS SHALL NOT BE UTILIZED BY ANY PERSON, FIRM OR CORPORATION WITHOUT THE SPECIFIC WRITTEN PERMISSION OF BL COMPANIES.

SEED MIX NOTES

A. LAWN SEEDING MIX:
- 15 % PERENNIAL RYEGRASS (BLEND OF 3 IMPROVED HYBRIDS)
- 25 % FINE LEAF OR CREEPING FESCUE (BLEND OF 3 IMPROVED HYBRIDS)
- 60 % KENTUCKY BLUEGRASS (BLEND OF 3 IMPROVED HYBRIDS)
- SEEDING RATE: 5 LBS/1,000 S.F.
- SEEDING DATES: AUGUST 15 – OCTOBER 1 AND APRIL 15 – JUNE 30 UNLESS OTHERWISE APPROVED BY THE OWNER OR LANDSCAPE ARCHITECT.

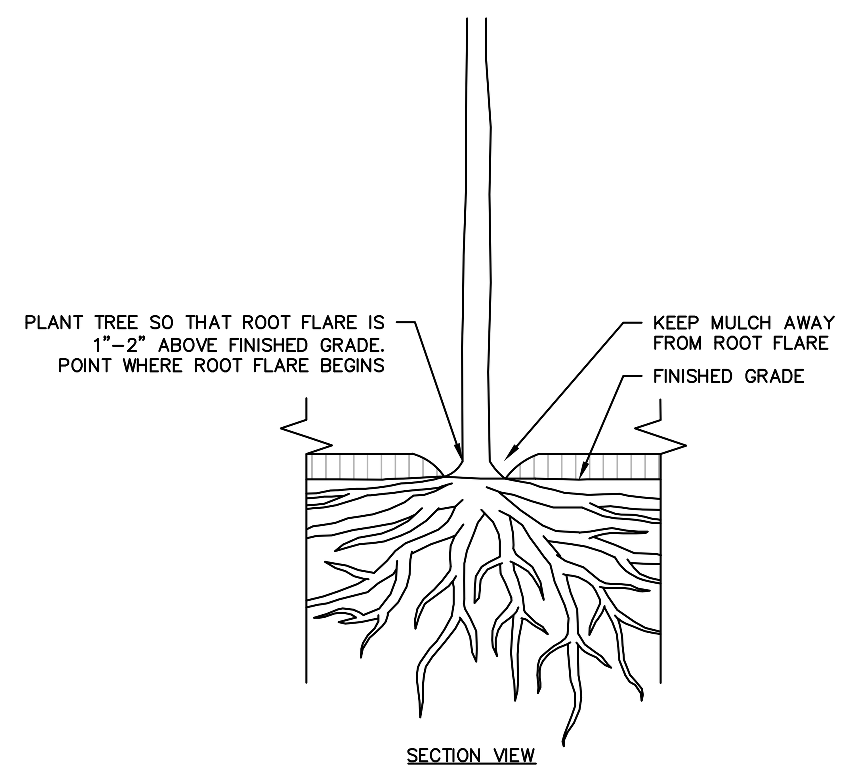

ROOT FLARE DIAGRAM

N.T.S

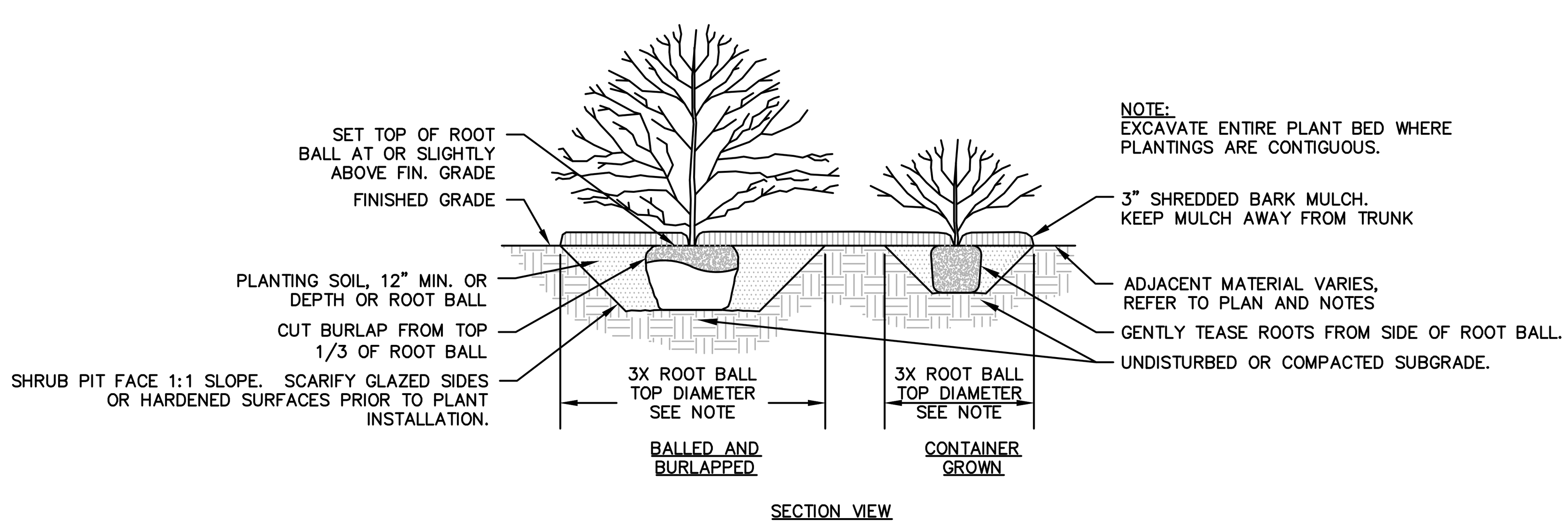

SHRUB PLANTING

N.T.S

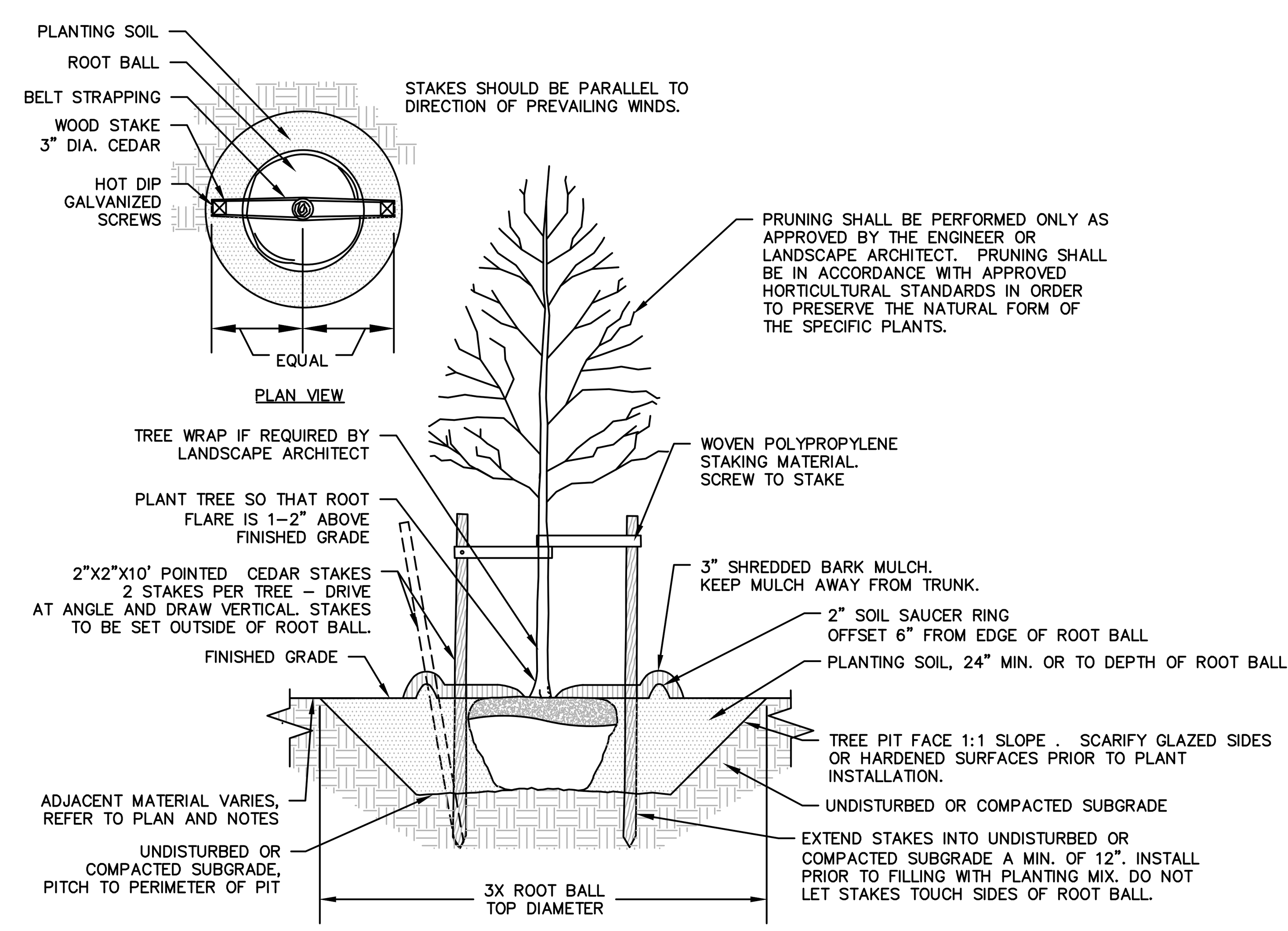

NOTES:
1. STAKING FOR TREES ON SLOPES SHALLOWER THAN 4:1 OR LESS THAN 3" CALIPER TO BE PERFORMED AT CONTRACTORS DISCRETION.
2. WOVEN POLYPROPYLENE STAKING MATERIAL SHALL BE DEEPROOT ARBORTIE (GREEN) OR APPROVED EQUIVALENT. MATERIAL SHALL BE LOOPED AROUND TREE THROUGH EACH OTHER, TWISTED, AND SECURED TO THE STAKE. INSTALL SPECIFIED MATERIAL IN ACCORDANCE WITH MANUFACTURER'S DIRECTIONS.
3. BEFORE IN HOLE, REMOVE BOTTOM OF CAGE. ONCE IN HOLE, REMOVE REST OF CAGE FROM ROOT BALL. REMOVE TWINE AND BURLAP FROM TOP 1/3 OF ROOT BALL – SCORE REMAINING 2/3 OF BURLAP. IF BURLAP IS SYNTHETIC OR HAS BEEN TREATED WITH ANTI–DESSICANT, COMPLETELY REMOVE IT FROM ROOT BALL.

DECIDUOUS TREE PLANTING

N.T.S

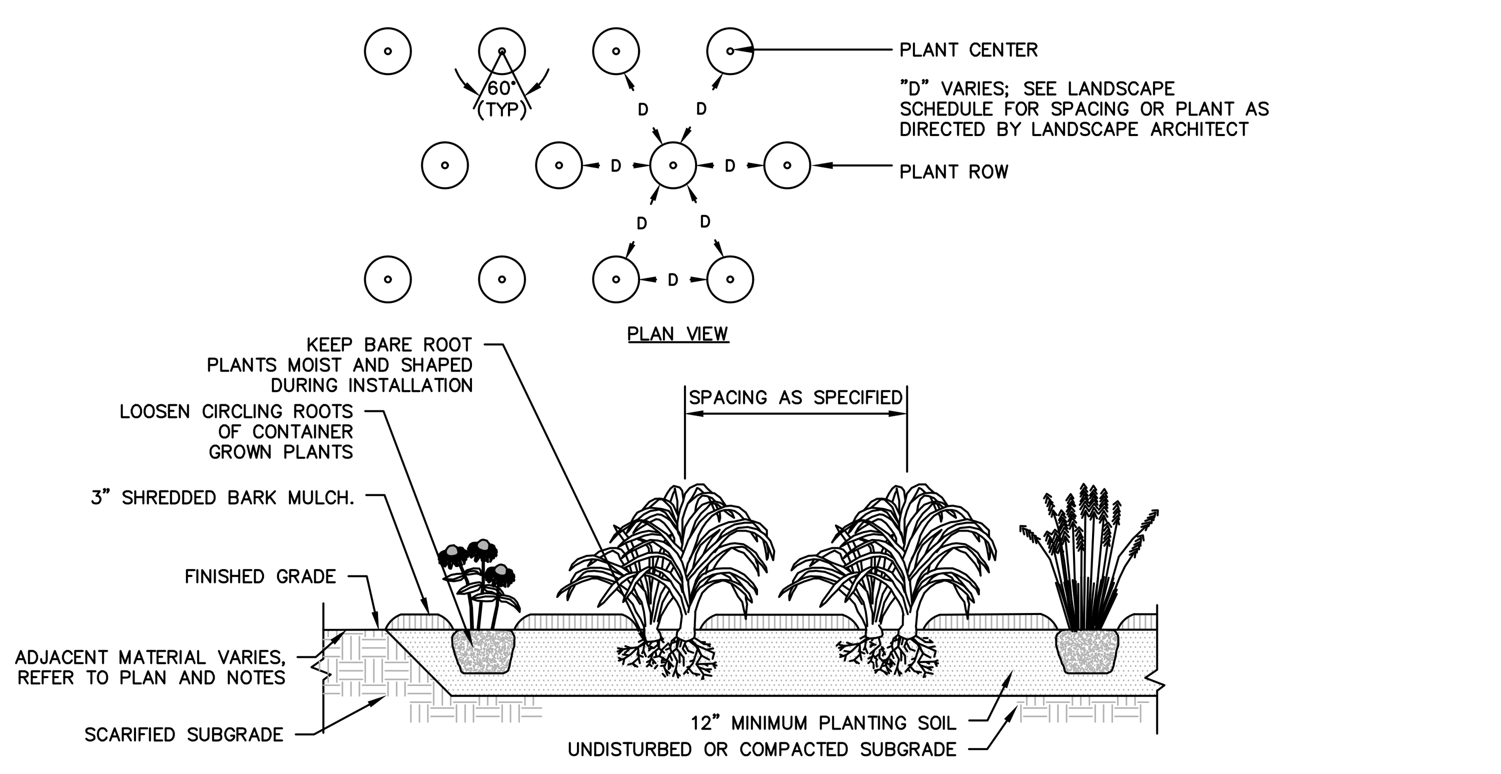

GROUNDCOVER PLANTING

N.T.S

LANDSCAPE NOTES

1. THE LANDSCAPE PLAN AND DETAIL SHEET ARE FOR LANDSCAPING INFORMATION ONLY. REFER TO THE OTHR PLANS FOR ALL OTHER INFORMATION.

2. COORDINATE PLANT MATERIAL LOCATIONS WITH SITE UTILITIES. UTILITY LOCATIONS SHOWN ON THE DRAWINGS ARE APPROXIMATE. EXERCISE CARE WHEN DIGGING IN AREAS OF POTENTIAL CONFLICT WITH UNDERGROUND OR OVERHEAD UTILITIES. THE CONTRACTOR IS RESPONSIBLE FOR ANY DAMAGE DUE TO CONTRACTOR'S NEGLIGENCE AND SHALL REPLACE OR REPAIR ANY DAMAGE AT CONTRACTOR'S EXPENSE.

3. THE LOCATIONS FOR PLANT MATERIAL ARE APPROXIMATE AND ARE SUBJECT TO FIELD ADJUSTMENT DUE TO UTILITY LOCATIONS AND SITE CONDITIONS. THE CONTRACTOR SHALL ACCURATELY STAKE OUT THE LOCATIONS FOR ALL PLANTS FOR THE REVIEW, ADJUSTMENT, AND APPROVAL BY OWNER OR LANDSCAPE ARCHITECT PRIOR TO PLANTING.

4. THE CONTRACTOR SHALL GUARANTEE THAT ALL PLANTS SHALL BE HEALTHY AND FREE OF DISEASE FOR A PERIOD OF ONE YEAR OR JUNE 1ST OF THE YEAR FOLLOWING INSTALLATION, WHICHEVER IS LONGER, AFTER SUBSTANTIAL COMPLETION AND ACCEPTANCE BY OWNER OR LANDSCAPE ARCHITECT. CONTRACTOR SHALL REPLACE ANY DEAD OR UNHEALTHY PLANTS AT CONTRACTOR'S EXPENSE. PLANT MATERIAL REPLACEMENTS SHALL BE GUARANTEED FOR ONE FULL YEAR FROM DATE OF REPLACEMENT. REPLACEMENT PLANTS SHALL BE THE SAME AS SPECIFIED FOR THE ORIGINAL PLANTING. REPLACEMENTS SHALL BE MADE AS MANY TIMES AS NECESSARY TO ENSURE HEALTHY PLANTS. FINAL ACCEPTANCE SHALL BE MADE IF ALL PLANTS MEET THE GUARANTEE REQUIREMENTS INCLUDING MAINTENANCE. MAINTENANCE RESPONSIBILITIES INCLUDE CULTIVATING, SPRAYING, WEEDING, WATERING, TIGHTENING GUYS, PRUNING, FERTILIZING, MULCHING, AND ANY OTHER OPERATIONS NECESSARY TO MAINTAIN PLANT VIABILITY. MAINTENANCE SHALL BEGIN IMMEDIATELY AFTER PLANTING AND CONTINUE UNTIL THE END OF THE GUARANTEE PERIOD. DURING THE LANDSCAPE MAINTENANCE PERIOD (GUARANTEE) THE LANDSCAPE CONTRACTOR SHALL NOTIFY THE OWNER IN WRITING OF ANY SITE CONSTRAINTS (PHYSICAL, ENVIRONMENT, ETC.) OR MAINTENANCE DEFICIENCIES THAT MAY AFFECT LANDSCAPE VEGETATION ESTABLISHMENT.

5. THE CONTRACTOR SHALL SUPPLY ALL LABOR, PLANTS, AND MATERIALS IN QUANTITIES SUFFICIENT TO COMPLETE THE WORK SHOWN ON THE DRAWINGS AND LISTED IN THE PLANT SCHEDULE. IN THE EVENT OF A DISCREPANCY BETWEEN QUANTITIES SHOWN IN THE PLANT SCHEDULE AND THOSE REQUIRED BY THE DRAWINGS, THE LARGER SHALL APPLY. ALL PLANTS SHALL BE ACCLIMATED BY THE SUPPLY NURSERY TO THE LOCAL HARDINESS ZONE AND BE CERTIFIED THAT THE PLANTING MATERIAL HAS BEEN GROWN FOR A MINIMUM OF TWO YEARS AT THE SOURCE AND OBTAINED WITHIN 200 MILES OF PROJECT SITE UNLESS OTHERWISE APPROVED BY OWNER OR LANDSCAPE ARCHITECT.

6. PLANTS SHALL HAVE TAGS THAT IDENTIFY PLANT GENUS, SPECIES, CULTIVAR (IF APPLICABLE), PLANT COMMON NAME, NAME OF SOURCE NURSERY, AND SIZE OF PLANT FOR REVIEW OF OWNER OR LANDSCAPE ARCHITECT.

7. NO PLANT SHALL BE PLACED IN THE GROUND BEFORE ROUGH GRADING HAS BEEN COMPLETED AND APPROVED BY THE OWNER OR LANDSCAPE ARCHITECT. STAKING THE LOCATION OF ALL TREES AND SHRUBS SHALL BE COMPLETED PRIOR TO PLANTING FOR APPROVAL BY THE OWNER OR LANDSCAPE ARCHITECT.

8. FINAL GRADES SHALL BLEND SMOOTHLY WITH EXISTING GRADES, AND TOP AND BOTTOM OF SLOPES SHALL BE ROUNDED.

9. ALL TREE AND SHRUB MASSINGS SHALL BE MULCHED TO A DEPTH OF 3". ANNUAL AND PERENNIAL BEDS SHALL BE MULCHED TO A DEPTH OF 2". MULCH SHALL BE UNCOLORED TRIPLE–SHREDDED HARDWOOD BARK MULCH, AGED AT LEAST 6 MONTHS.

10. IF TREE STAKING IS PROPOSED, TREE STAKING MUST BE COMPLETED THE SAME DAY AS THE TREE IS INSTALLED. ALL TREES SHALL BE STAKED OR GUYED PER DETAIL.

11. LANDSCAPE PLANTING AREAS MUST BE FREE DRAINING. PAVEMENT, COMPACTED SUBGRADE, DEAD OR DYING PLANT MATERIAL, BLASTED ROCK, STONES GREATER THAN 1" IN DIAMETER, AND ANY OTHER MATERIAL HARMFUL TO PLANT GROWTH AND DEVELOPMENT SHALL BE REMOVED FROM AREAS TO BE LANDSCAPED AS REQUIRED BY PLANTING DETAILS OR SPECIFICATIONS.

12. PLANTING SOIL:

DEPTH: PLANTING SOIL SHALL BE INSTALLED AT A MINIMUM DEPTH OF 4" OR AS NOTED IN THE LANDSCAPE DETAILS. PLANTING SOIL SHALL BE UTILIZED IN ALL PLANTING AREAS INCLUDING SEEDED AREAS.

TESTING: CONTRACTOR SHALL SUBMIT (2) SOIL SAMPLES PER SOIL STOCKPILE TO A CERTIFIED TESTING LABORATORY TO DETERMINE ACIDITY, ORGANIC CONTENT, MECHANICAL ANALYSIS, AVAILABLE NUTRIENTS (N,P,K,Ca,Mg,S,Fe,Mn,Zn,Cu,B,Al,Pb) AND NECESSARY AMENDMENTS TO SOIL. THE CONTRACTOR SHALL SUBMIT THE TEST RESULTS TO THE OWNER OR LANDSCAPE ARCHITECT FOR REVIEW AND APPROVAL. TEST RESULTS SHALL RECOMMEND AMENDMENTS THAT WILL ALTER THE SOIL CHARACTERISTICS SUCH THAT THE CHARACTERISTICS DESCRIBED BELOW ARE ACHIEVED AND THE SPECIFIED PLANTS (CONTRACTOR TO PROVIDE LIST TO TESTING LABORATORY) WILL ACHIEVE PROPER GROWTH THAT IS NEITHER DEFICIENT NOR EXCESSIVE. THE CONTRACTOR SHALL INCORPORATE THESE AMENDMENTS AT NO INCREASE IN CONTRACT PRICE.

CHARACTERISTICS: PLANTING SOIL MAY CONSIST OF EXISTING ON–SITE SOILS, AMENDED ON–SITE SOILS, OR IMPORTED SOILS MEETING THE FOLLOWING CRITERIA:

A. NOT TO CONTAIN MATERIALS HARMFUL TO PLANT LIFE, TO BE CLEAN, FERTILE, FRIABLE, AND WELL DRAINING. ALL PLANTING SOIL SHALL BE FREE OF ANY SUBSOIL EARTH CLODS, SODS, STONES OVER 1" IN ANY DIMENSION, STICKS, ROOTS, WEEDS, LITTER AND OTHER DELETERIOUS MATERIAL. PLANTING SOIL SHALL BE UNIFORM IN QUALITY AND TEXTURE.

B. PLANTING SOIL SHALL HAVE THE FOLLOWING OPTIMUM RANGES UNLESS OTHERWISE APPROVED BY THE OWNER OR LANDSCAPE ARCHITECT.

ORGANIC CONTENT	3% – 6% FOR LAWN OR GRASS AREAS. 4% – 8% FOR TREE AND SHRUB PLANTERS. 8%–16% FOR RETENTION OR DETENTION BASINS.
(BY LOSS OF IGNITION AT 375 C METHOD OF TESTING)	
PH	6.0 – 7.3

C. NUTRIENT LEVELS SHALL BE ACHIEVED BY THE CONTRACTOR'S ADDITION OF AMENDMENTS TO THE PLANTING SOIL TO MEET THE OPTIMUM NUTRIENT LEVELS SPECIFIED IN THE TESTING LABORATORY REPORT FOR EACH OF PLANTS TO BE INSTALLED.

D. SOIL SHALL BE COMPACTED TO A SURFACE PENETRATION RESISTANCE OF 75–125 LBS/SQ.IN.

E. SOIL MAY BE TREATED FOR WEEDS WITH PRE–EMERGENT OR POST–EMERGENT HERBICIDE, AS NEEDED AND AS APPROPRIATE FOR THE APPLICATION SEASON OR LOCATION, OR ELIMINATE GROWTH OF UNWANTED PLANT MATERIAL. APPLY HERBICIDES IN ACCORDANCE WITH MANUFACTURERS RECOMMENDATIONS. HERBICIDE APPLICATOR MUST BE LICENSED IN THE STATE OF CONNECTICUT, AND PERFORM APPLICATIONS IN ACCORDANCE WITH LOCAL REQUIREMENTS, PERMITTING STIPULATIONS, AND ANY OTHER RESTRICTIONS INCLUDING AND IN EXCESS OF STATE AND FEDERAL REGULATIONS.

F. PROPOSED TOPSOIL SHALL MEET THE USDA SOILS TEXTURAL PERCENTAGES OF SAND, SILT, AND CLAY FOR FOLLOWING CLASSIFICATIONS:
- LOAM
- SANDY LOAM WHERE SAND DOES NOT EXCEED 70% AND CLAY IS NOT LESS THAN 5%.
- SANDY CLAY LOAM WHERE SAND DOES NOT EXCEED 70% AND CLAY IS LESS THAN 28%.

G. BIORETENTION SOILS: SOIL TO BE INSTALLED IN RETENTION BASINS, PONDS, OR OTHER STORMWATER MANAGEMENT ENVIRONS SHALL MEET THE ABOVE DESCRIBED CHARACTERISTICS AND AS FOLLOWS:
- SOIL SHALL NOT CONTAIN MORE THAN 20% CLAY AND LESS THAN 40% SILT.
- SOIL SHALL HAVE AN INFILTRATION RATE BETWEEN 1/2" AND 3" PER HOUR.

H. MODIFICATION TO THE PLANTING SOIL CHARACTERISTICS DESCRIBED ABOVE MAY BE SUBMITTED FOR APPROVAL BY THE LANDSCAPE ARCHITECT. CONTRACTOR MUST DEMONSTRATE PROPOSED CHARACTERISTICS ARE EQUAL TO OR SUPERIOR TO THE SPECIFIED CHARACTERISTICS WITH RESPECT TO SUPPORTING PLANT GROWTH, AND STORMWATER MANAGEMENT.

12. PLANTING AMENDMENTS:
APPLY FERTILIZER AND OTHER AMENDMENTS AS RECOMMENDED FOR EACH PLANTING AREA BY SOIL ANALYSIS. APPLY AMENDMENTS IN A MANNER CONSISTENT WITH MANUFACTURER'S RECOMMENDATIONS. ANY ORGANIC AMENDMENTS SHALL HAVE A pH BETWEEN 4.5 AND 5.5 UNLESS OTHERWISE RECOMMENDED.

13. PLANT REQUIREMENTS: ALL PLANTS SHALL CONFORM IN SIZE AND GRADE TO THE AMERICAN STANDARD FOR NURSERY STOCK, ANSI Z60.1 (LATEST EDITION). ALL PLANTS SHALL MEET THE ADDITIONAL REQUIREMENTS SET FORTH BELOW AND IN WRITTEN SPECIFICATIONS AS APPLICABLE. ALL TREES AND SHRUBS SHALL HAVE BEEN GROWN AT A COMMERCIAL NURSERY WITHIN 200 MILES OF THE PROJECT SITE UNLESS OTHERWISE APPROVED BY OWNER OR LANDSCAPE ARCHITECT. THEY SHALL BE TYPICAL OF THEIR SPECIES OR VARIETY. THEY SHALL BE HEALTHY, SYMMETRICAL, EVENLY AND DENSELY BRANCHED, AND DENSELY FOLIATED WHEN IN LEAF. THEY SHALL BE FREE OF BARK INJURY, DISEASE, AND INSECT PESTS. ALL TREES SHALL HAVE A STRAIGHT TRUNK WITH A SINGLE MAIN LEADER UNLESS OTHERWISE CHARACTERISTIC OF THE SPECIES OR VARIETY. THE OWNER OR LANDSCAPE ARCHITECT WILL ALLOW SUBSTITUTIONS ONLY UPON WRITTEN APPROVAL. SIZES SHALL CONFORM TO THE MEASUREMENT SPECIFIED ON THE DRAWINGS. PLANTS LARGER THAN SPECIFIED MAY BE USED IF APPROVED, BUT THE USE OF SUCH PLANTS SHALL NOT INCREASE THE CONTRACT PRICE. ALL OVERSTORY TREES PLANTED ALONG PARKING AREAS, SIDEWALKS AND PEDESTRIAN ACCESSES SHALL NOT BRANCH BELOW 7' FEET IF THE TREE CALIPER IS 3" INCHES OR GREATER. ALL PLANT MATERIALS ARE SUBJECT TO INSPECTION AND ACCEPTANCE BY THE OWNER OR LANDSCAPE ARCHITECT AT THE NURSERY SOURCE. THE CONTRACTOR SHALL COORDINATE SOURCE VISITS WITH THE LANDSCAPE ARCHITECT AND SHALL ACCOMPANY THE OWNER AND/OR LANDSCAPE ARCHITECT FOR ALL INSPECTIONS. CERTIFICATES OF COMPLIANCE WITH SPECIFICATIONS ARE REQUIRED FOR ALL PLANTS.

14. INSPECTION AND REVIEW:
ALL PLANT MATERIAL SHALL BE SUBJECT TO INSPECTION AND ACCEPTANCE BY THE OWNER OR LANDSCAPE ARCHITECT AT THE NURSERY SOURCE OR PLACE OF GROWTH. THE CONTRACTOR SHALL COORDINATE WITH THE LANDSCAPE ARCHITECT ON A SCHEDULE FOR SOURCE VISITS AND ACCOMPANY THE OWNER OR LANDSCAPE ARCHITECT FOR ALL SOURCE INSPECTIONS. CERTIFICATES OF COMPLIANCE ARE REQUIRED FOR ALL PLANT MATERIALS.
PHOTOGRAPHIC REVIEW OF PLANT MATERIAL IS ACCEPTABLE IF APPROVED BY LANDSCAPE ARCHITECT. PHOTOGRAPHS MUST BE PROVIDED IN QUANTITY AND VARIETY TO ALLOW LANDSCAPE ARCHITECT SUFFICIENT INFORMATION TO MAKE A REASONABLE DETERMINATION AS TO THE PLANTS' QUALITY. OWNER AND LANDSCAPE ARCHITECT RESERVES THE RIGHT TO REJECT PLANT MATERIAL DELIVERED TO THE SITE BUT PREVIOUSLY ACCEPTED IF DAMAGED OR NOT PROPERLY MAINTAINED DURING THE DELIVERY PROCESS.

15. PLANTING SEASONS (UNLESS OTHERWISE APPROVED BY THE OWNER OR LANDSCAPE ARCHITECT)

	SPRING	FALL
EVERGREEN TREES AND SHRUBS	APRIL 1 TO JUNE 15	SEPTEMBER 1 TO OCTOBER 15
DECIDUOUS TREES AND SHRUBS	APRIL 1 TO JUNE 15	SEPTEMBER 15 TO NOVEMBER 15
GROUNDCOVERS	APRIL 1 TO JUNE 15	SEPTEMBER 1 TO OCTOBER 15
PERENNIALS	MAY 15 TO JUNE 15	SEPTEMBER 1 TO OCTOBER 15
SEED MIXES	PER MANUFACTURERS RECOMMENDATIONS OR AS LISTED IN SEED MIX NOTES	

16. SEEDING MIXTURES: REFER TO SEED MIX NOTES. SEEDED AREA SHALL BE ACCEPTED WHEN SEED AREA ACHIEVES 90% COVERAGE.

17. ALL SLOPES STEEPER THAN 3:1 RECEIVING A SEED MIX SHALL BE COVERED WITH AN EROSION CONTROL BLANKET OF STRAW FIBER AND BIODEGRADABLE OR PHOTODEGRADABLE NETTING.

18. UNLESS OTHERWISE NOTED IN DRAWING SET, NEW TREELINES SHALL EQUAL CLEARING AND GRUBBING LIMIT FOR CONSTRUCTION.

19. ALL DISTURBED AREAS NOT OTHERWISE DEVELOPED SHALL BE SEEDED WITH THE LAWN SEED MIX.

BL Companies
Architecture
Engineering
Environmental
Land Surveying

100 Constitution Plaza, 10th Floor
Hartford, CT 06103
(860) 249-2200
(860) 249-2400 Fax

PROPOSED RETAIL DEVELOPMENT
580 LAKE ROAD
ANDOVER, TOLLAND COUNTY, CONNECTICUT

REVISIONS

No.	Date	Desc.
1.	12/10/2021	REVISED PER HEALTH DEPARTMENT COMMENTS

Designed	L.M.W.
Drawn	L.M.W.
Reviewed	J.A.B.
Scale	NONE
Project No.	2101726
Date	11/18/2021
CAD File:	LL210172601

Title
LANDSCAPE NOTES AND DETAILS

Sheet No.
LL-2

12/16/2021, LWHOLEY, G:\JOBS21\16\2101726\DWG\LL210172601.DWG,LL-2 24X36 NTS.

© 2021 BL COMPANIES, INC. THESE DRAWINGS SHALL NOT BE UTILIZED BY ANY PERSON, FIRM OR CORPORATION WITHOUT THE SPECIFIC WRITTEN PERMISSION OF BL COMPANIES.

FOR PERMITTING PURPOSES ONLY
NOT RELEASED FOR CONSTRUCTION

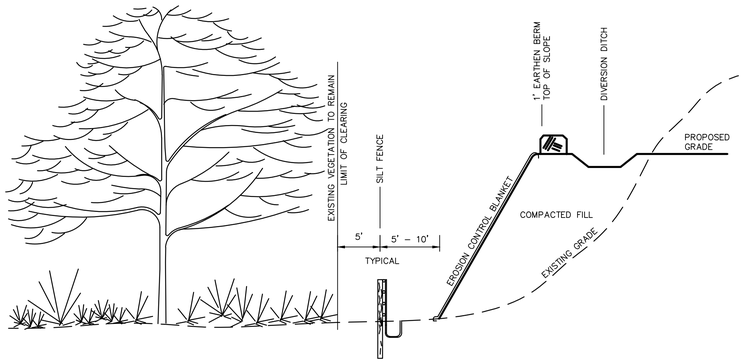

TYPICAL EROSION CONTROL ON SLOPES

N.T.S. BLEC–011

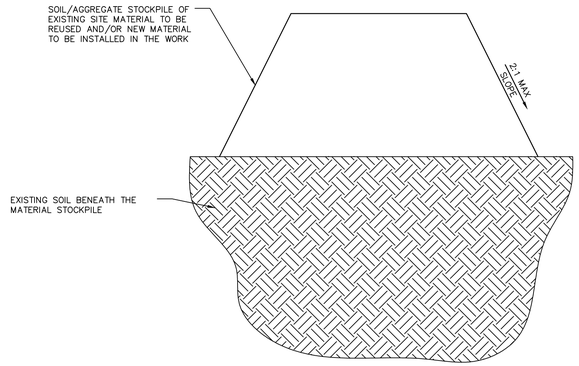

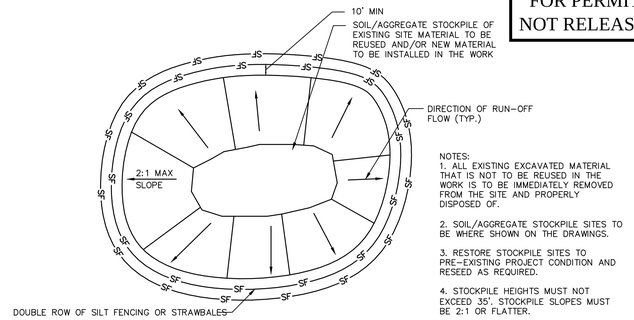

NOTES:
1. ALL EXISTING EXCAVATED MATERIAL THAT IS NOT TO BE REUSED IN THE WORK IS TO BE IMMEDIATELY REMOVED FROM THE SITE AND PROPERLY DISPOSED OF.

2. SOIL/AGGREGATE STOCKPILE SITES TO BE WHERE SHOWN ON THE DRAWINGS.

3. RESTORE STOCKPILE SITES TO PRE–EXISTING PROJECT CONDITION AND RESEED AS REQUIRED.

4. STOCKPILE HEIGHTS MUST NOT EXCEED 35'. STOCKPILE SLOPES MUST BE 2:1 OR FLATTER.

MATERIALS STOCKPILE DETAIL

N.T.S. BLEC–006

* WHERE SEDIMENTS CONTAIN LESS THAN 80% SAND, A 100 FT MINIMUM IS REQUIRED.

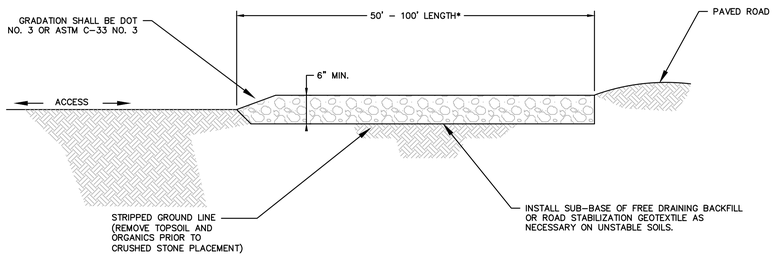

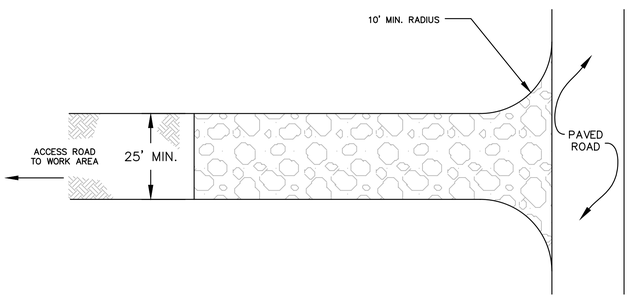

TYPICAL CONSTRUCTION ENTRANCE

N.T.S. CT DEEP CE–2

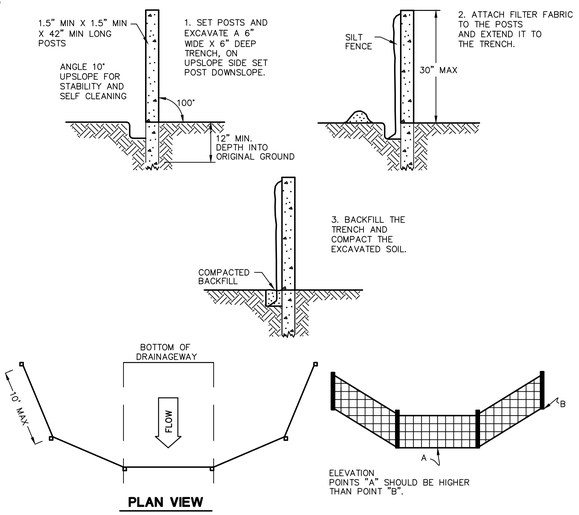

SILT FENCE BARRIER

N.T.S. CTEC–003

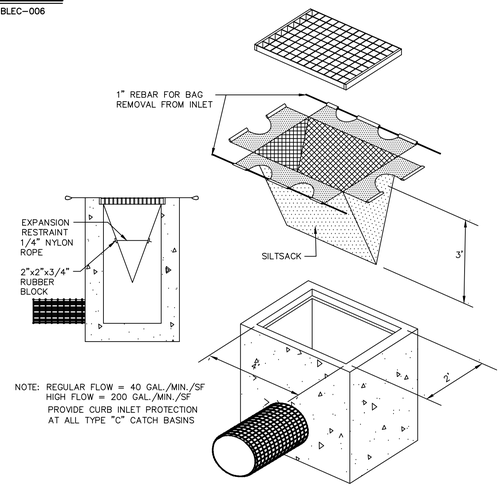

NOTE: REGULAR FLOW = 40 GAL./MIN./SF
HIGH FLOW = 200 GAL./MIN./SF
PROVIDE CURB INLET PROTECTION AT ALL TYPE "C" CATCH BASINS

SILTSACK DETAIL

N.T.S. BLEC–005

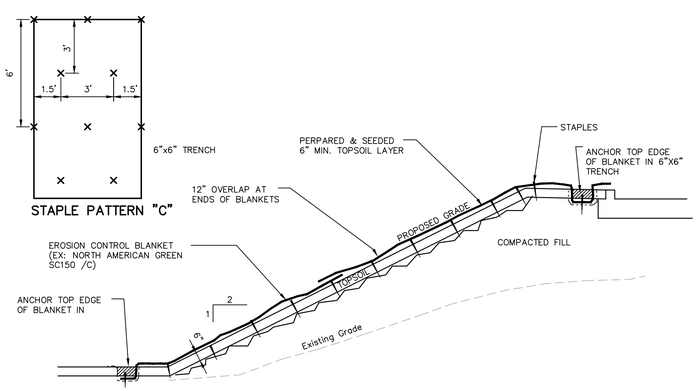

EROSION CONTROL BLANKET ON FILL SLOPE

N.T.S. BLEC–009

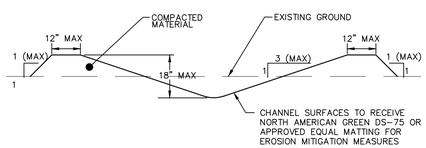

NON-ENGINEERED TEMPORARY DIVERSION DITCH DETAIL

N.T.S.

Temporary Sediment Trap Sizing

From the 2002 Connecticut Guidelines for Soil Erosion and Sediment Control:

Temporary sediment traps shall be provided with 134 CY of storage volume per acre of drainage area, half of which shall be provided as wet storage volume (Vw) and the remaining half shall be dry storage volume (Vd) as described below:

Figure TST-1 Formula for Figuring Temporary Sediment Trap Storage Requirements

Wet storage volume may be approximated as follows:

$$Vw = 0.85 \times A_w \times D_w$$

where,

V_w = the wet storage volume in cubic feet
A_w = the surface area of the flooded area at the base of the stone outlet in square feet
D_w = the maximum depth in feet, measured from the low point in the trap to the base of the stone outlet.

Dry storage volume may be approximated as follows:

$$V_d = \frac{(A_w + A_d)}{2} \times D_d$$

where,

V_d = the dry storage volume
A_w = the surface area of the flooded area at the base of the stone outlet in square feet.
A_d = the surface area of the flooded area at the top of the stone outlet (over flow mechanism), in square feet
D_d = the depth in feet, measured from the base of the stone outlet to the top of the stone outlet

Note: Conversion between cubic feet and cubic yards is: cubic feet x 0.037 = cubic yards.

Figure TST-2 Minimum Top Width (w) Required for Temporary Sediment Trap Embankments According to Height of Embankment (feet)

1. PERVIOUS STONE DIKE SHALL BE CONSTRUCTED OF CT DOT MODIFIED RIPRAP WITH ø3 STONE ON FACE.
2. NON-OVERFLOW PORTIONS AND ABUTMENTS OF TEMPORARY SEDIMENT TRAPS MAY BE CONSTRUCTED OF COMPACTED EARTHFILL.

TOP WIDTH VS. HEIGHT

H = HEIGHT OF EMBANKMENT
W = TOP WIDTH OF EMBANKMENT

H (ft)	W(ft)
1.5	2.0
2.0	2.0
2.5	2.5
3.0	2.5
3.5	3.0
4.0	3.0
4.5	4.0
5.0	4.5

Trap #	Drainage Area (DA) ft²	Drainage Area (DA) ac	Total Storage Volume Required CY	Wet Storage Required (Vw) CY	Dry Storage Required (Vd) CY	Surface area of flooded volume (Aw) ft²	Depth of flooded volume (Dw) ft	Surface area of flooded volume at outlet (Ad) ft²	Depth from outlet to top of flooded volume (Dd) ft	Wet Storage Provided (Vw) CY	Dry Storage Provided (Vd) CY	Total Storage Volume Provided CY	Bottom Elevation ft	Top of flooded volume elevation ft	Outlet Elevation ft
1	70,100	1.609	216	108	108	1150	3	1790	2.0	108	108	216	289	292	294

Architecture
Engineering
Environmental
Land Surveying
BL Companies
100 Constitution Plaza, 10th Floor
Hartford, CT 06103
(860) 249-2200
(860) 249-2400 Fax

STATE OF CONNECTICUT
CHRISTIAN T. VOLKMANN
No. 19,000
LICENSED
PROFESSIONAL ENGINEER

PROPOSED RETAIL DEVELOPMENT
580 LAKE ROAD
ANDOVER, TOLLAND COUNTY, CONNECTICUT

Desc.: REVISED PER HEALTH DEPARTMENT COMMENTS

REVISIONS
No. Desc. Date
1. 12/10/2021

Designed S.E.L.
Drawn R.R.F.
Reviewed K.M.M.
Scale NONE
Project No. 2101726
Date 11/18/2021
CAD File: DN210172601

Title
DETAILS SHEET

Sheet No.
DN-1

Xref (s): BD210100600B1 ; BD210172601

12/9/2021, SEAGERC, G:\JOBS\21\01\2101726\DWG\DN210172601.DWG\DN-1.DWG

© 2021 BL COMPANIES, INC. THESE DRAWINGS SHALL NOT BE UTILIZED BY ANY PERSON, FIRM OR CORPORATION WITHOUT THE SPECIFIC WRITTEN PERMISSION OF BL COMPANIES.

FOR PERMITTING PURPOSES ONLY
NOT RELEASED FOR CONSTRUCTION

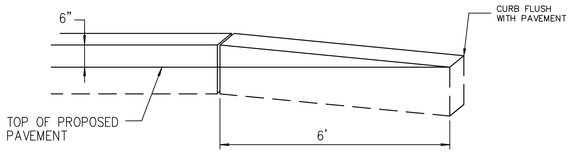

6' CONCRETE TRANSITION CURB

N.T.S.

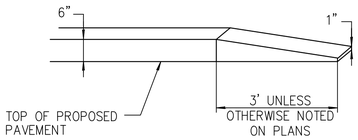

6' BITUMINOUS CONCRETE TRANSITION CURB

N.T.S.

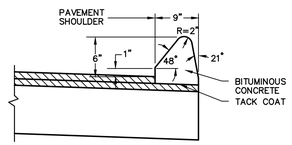

BITUMINOUS CONCRETE LIP CURBING

N.T.S.

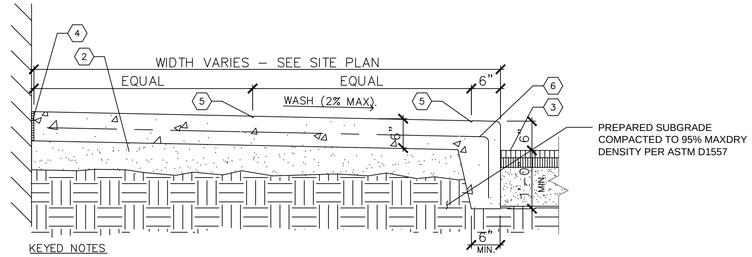

KEYED NOTES

1. N/A
2. 6" PROCESSED AGGREGATE BASE COURSE CTDOT M.05.01
3. PAVEMENT.
4. COMPRESSIBLE FILLER (3/4" MAXIMUM). CUT BACK AND PROVIDE SEALANT, TYPICAL, AT ALL JOINTS WITH FILLER.
5. 1/4" TOOLED JOINT
6. 6" X 6" W2.1 X 2.1 W.W.F.

NOTE: EXPANSION JOINT 20' O.C. MAXIMUM. 1/4" TOOL JOINT 5' O.C. OR AS DIRECTED. CONCRETE TO BE 4,000 P.S.I.

MONOLITHIC CONCRETE CURB AND SIDEWALK DETAIL

N.T.S. WAG

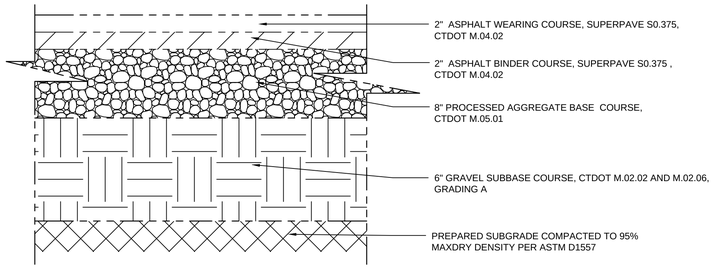

HEAVY DUTY BITUMINOUS CONCRETE PAVEMENT STRUCTURE DETAIL

N.T.S.

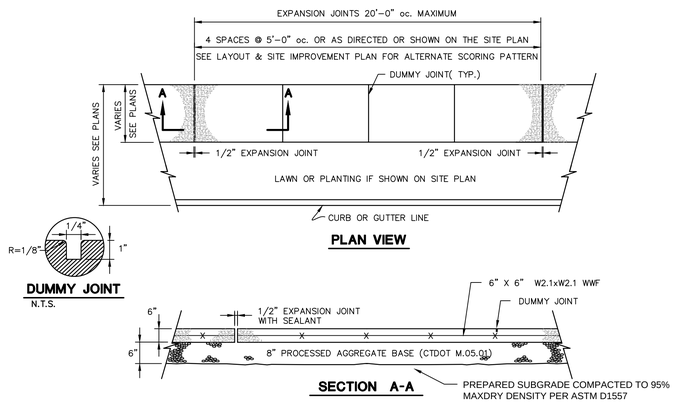

CONCRETE SIDEWALK DETAIL

N.T.S. BLSR-001

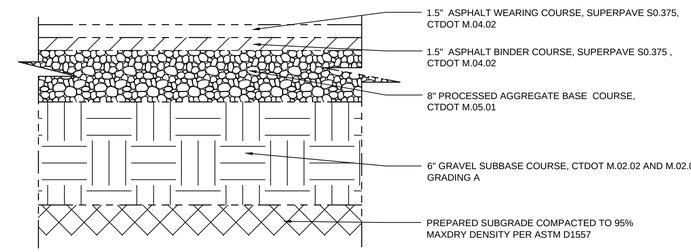

STANDARD DUTY BITUMINOUS CONCRETE PAVEMENT STRUCTURE DETAIL

N.T.S.

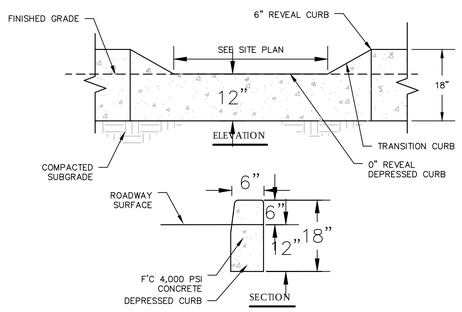

6" REVEAL DEPRESSED/ CONCRETE CURB

N.T.S.

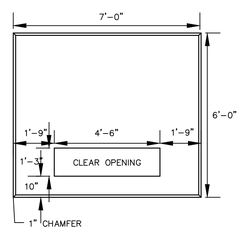

PLAN VIEW

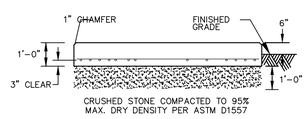

SECTION

CONFIRM SIZE WITH ELECTRIC COMPANY PRIOR TO CONSTRUCTION

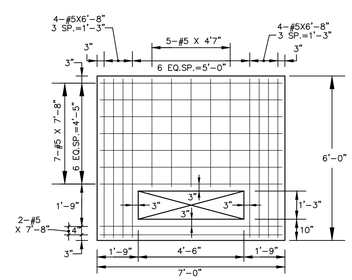

PLAN OF REINFORCING

TRANSFORMER PAD

N.T.S. BLLE-001

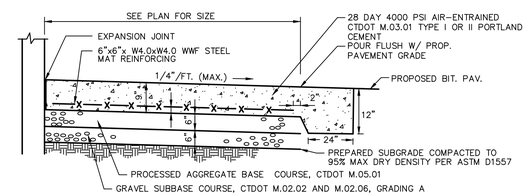

SECTION VIEW

CONCRETE TRASH ENCLOSURE DUMPSTER PAD AND CONCRETE PAVEMENT

N.T.S. BLPC-002

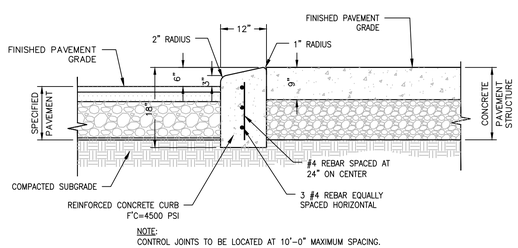

NOTE:
CONTROL JOINTS TO BE LOCATED AT 10'-0" MAXIMUM SPACING.

MOUNTABLE CONCRETE CURB

N.T.S

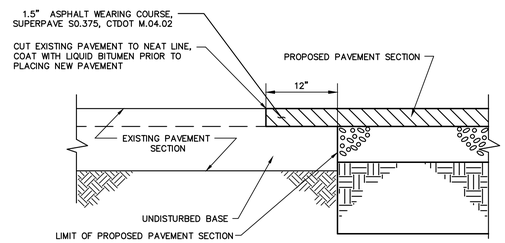

EDGE OF PAVEMENT DETAIL

N.T.S.

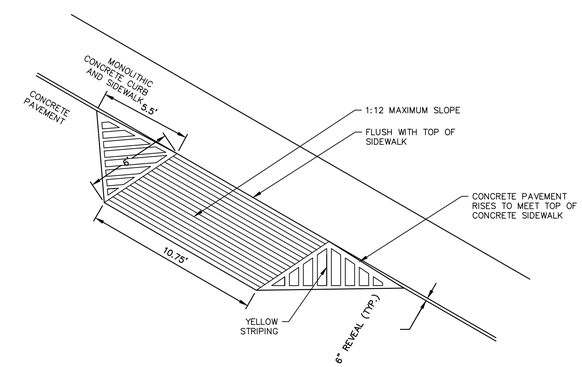

CONCRETE LOADING RAMP

N.T.S.

Architecture
Engineering
Environmental
Land Surveying
BL Companies
100 Constitution Plaza, 10th Floor
Hartford, CT 06103
(860) 249-2200
(860) 249-2400 Fax

STATE OF CONNECTICUT
LICENSED PROFESSIONAL ENGINEER

PROPOSED RETAIL DEVELOPMENT
580 LAKE ROAD
ANDOVER, TOLLAND COUNTY, CONNECTICUT

REVISIONS No.	Date	Desc.
1.	12/10/2021	REVISED PER HEALTH DEPARTMENT COMMENTS

Designed	S.E.L.
Drawn	R.R.F.
Reviewed	K.M.M.
Scale	NONE
Project No.	2101726
Date	11/18/2021

CAD File: DN210172601

Title
DETAILS SHEET

Sheet No.
DN-2

Xref (s): BD210600901; BD210172601

12/9/2021, S.ELCERO, c:\JOBS\11\2101726\DWG\DN210172601.DWG, DN-2 24X36,
© 2021 BL COMPANIES, INC. THESE DRAWINGS SHALL NOT BE UTILIZED BY ANY PERSON, FIRM OR CORPORATION WITHOUT THE SPECIFIC WRITTEN PERMISSION OF BL COMPANIES.

FOR PERMITTING PURPOSES ONLY
NOT RELEASED FOR CONSTRUCTION

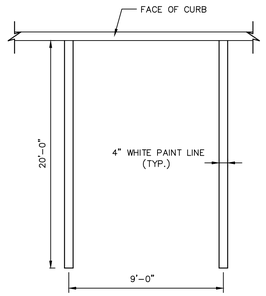

NOTE:
1. PROVIDE 2 COATS OF PAINT ON ALL SURFACES.
2. SEE PLAN FOR ACTUAL SPACE LOCATION AND DIMENSIONS.

TYPICAL PARKING SPACE DETAIL

N.T.S. BLPC-003

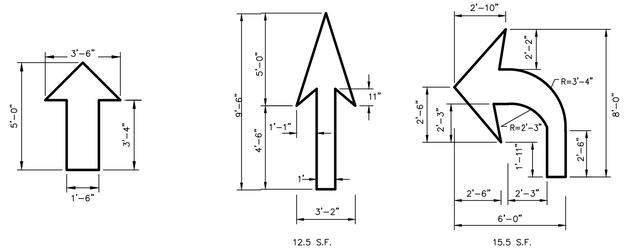

NOTES:
1. WHITE (ARROWS TO BE CENTERED IN TRAVEL LANE)

PAINTED TRAFFIC ARROW DETAILS

N.T.S BLPC-006

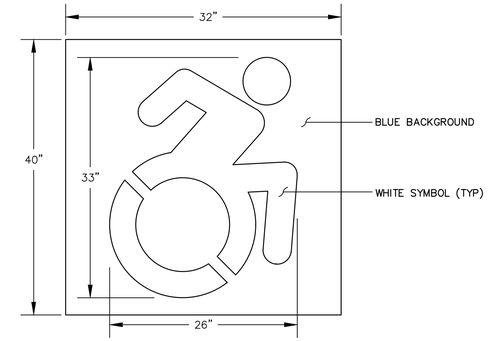

NOTE: HANDICAP SYMBOL TO ADHERE TO STATE BUILDING CODE, LATEST EDITION

CONNECTICUT SYMBOL OF ACCESSIBILITY

N.T.S.

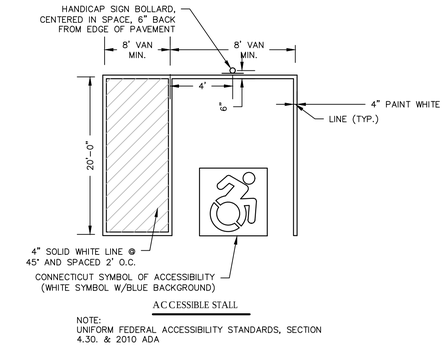

NOTE:
UNIFORM FEDERAL ACCESSIBILITY STANDARDS, SECTION 4.30. & 2010 ADA

TYPICAL HANDICAP PARKING STALL LAYOUT

N.T.S

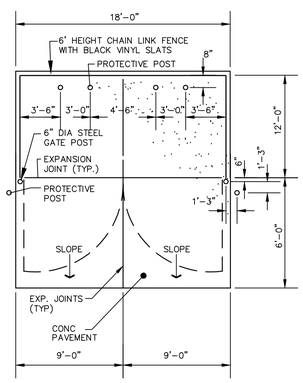

TRASH ENCLOSURE PLAN

N.T.S. BLSE-004

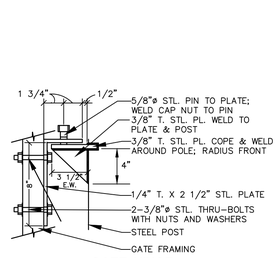

GATE HINGE

TRASH ENCLOSURE GATE (HALF SECTION)

N.T.S. BLSE-001

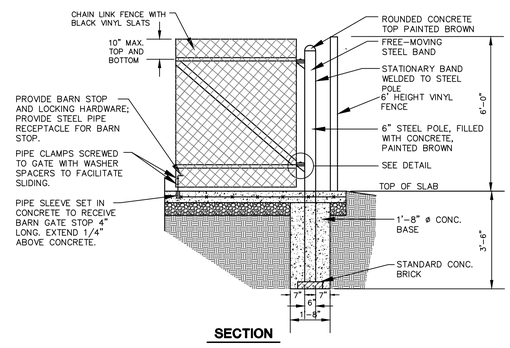

SECTION

TRASH ENCLOSURE CHAIN LINK FENCE GATE

N.T.S. BLFD-001

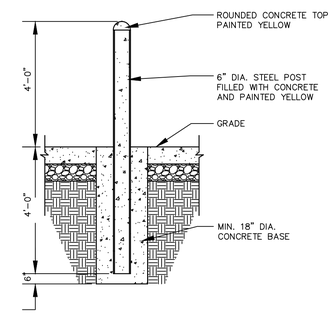

6" CONCRETE FILLED STEEL BOLLARD

N.T.S. BLSE-005

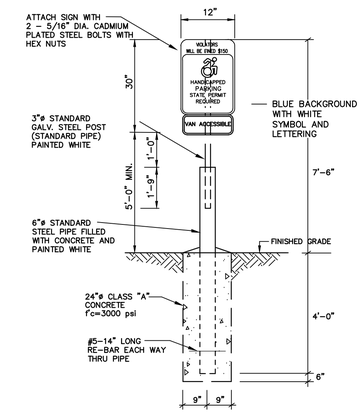

NOTE: HANDICAP SYMBOL TO ADHERE TO STATE BUILDING CODE, LATEST EDITION

HANDICAP SIGN BOLLARD DETAIL

N.T.S

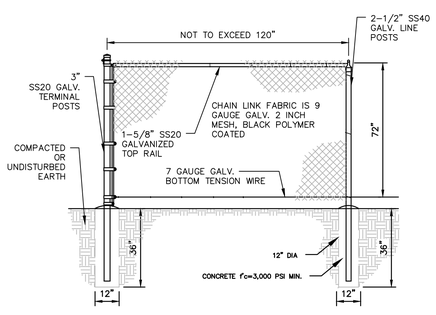

6' HIGH BLACK VINYL COATED CHAIN LINK FENCE

N.T.S

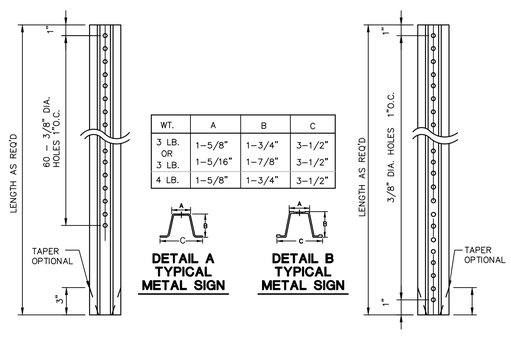

WT.	A	B	C
3 LB. OR 3 LB.	1-5/8"	1-3/4"	3-1/2"
	1-5/16"	1-7/8"	3-1/2"
4 LB.	1-5/8"	1-3/4"	3-1/2"

DETAIL A TYPICAL METAL SIGN

DETAIL B TYPICAL METAL SIGN

DETAIL A HOLE LOCATION

DETAIL B HOLE LOCATION

NOTES:
STEEL FOR POSTS SHALL CONFORM TO THE MECHANICAL REQUIREMENTS OF ASTM A 499-81 GRADE 60 AND TO THE CHEMICAL REQUIREMENTS OF ASTM A1-76 CARBON STEEL TEE RAIL HAVING NOMINAL WEIGHT OF "91 LBS OR GREATER PER LINEAR YARD.

AFTER FABRICATION ALL STEEL POSTS SHALL BE GALVANIZED TO MEET THE REQUIREMENTS OF ASTM A-123.

SIGN MOUNTING HEIGHT TO BE APPROVED BY THE ENGINEER.

ALL SIGNS IN STATE ROW TO MEET CTDOT SPECIFICATIONS FOR BREAKAWAY SIGNS. SEE CTDOT STANDARD DETAIL SHEET 'TYPICAL METAL SIGN POSTS AND SIGN MOUNTING DETAILS' AND CTDOT FORM 817

TYPICAL METAL SIGN POSTS

N.T.S. BLSD-001

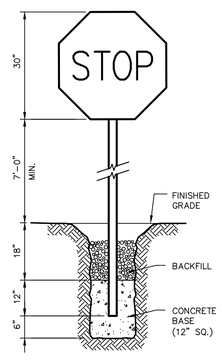

NOTE:
CONSTRUCT SIGN IN ACCORDANCE WITH DOT SPECIFICATIONS.

STOP SIGN

N.T.S. BLSD-002

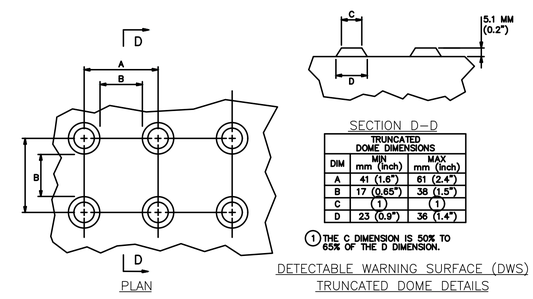

TRUNCATED DOME DIMENSIONS		
DIM	MIN mm (inch)	MAX mm (inch)
A	41 (1.6")	61 (2.4")
B	17 (0.65")	38 (1.5")
C	(1)	(1)
D	23 (0.9")	36 (1.4")

(1) THE C DIMENSION IS 50% TO 65% OF THE D DIMENSION.

DETECTABLE WARNING SURFACE (DWS) TRUNCATED DOME DETAILS

1. ALIGN DETECTABLE WARNING DOMES ON A SQUARE GRID IN THE PREDOMINANT DIRECTION OF TRAVEL TO PERMIT WHEELS TO ROLL BETWEEN THE DOMES.
2. PROVIDE DETECTABLE WARNING SURFACES THAT CONTRAST (70%) IN LIGHT REFLECTANCE WITH ADJOINING SURFACES, EITHER LIGHT-ON-DARK OR DARK-ON-LIGHT OR SAFETY YELLOW.

DETECTABLE TRUNCATED DOME DETECTABLE WARNING SURFACE (DWS) AND X-SECT.

N.T.S.

Architecture
Engineering
Environmental
Land Surveying
BL Companies
100 Constitution Plaza, 10th Floor
Hartford, CT 06103
(860) 249-2200
(860) 249-2400 Fax

STATE OF CONNECTICUT
DOMINIC R. FIORENTINO
No. 29203
LICENSED PROFESSIONAL ENGINEER

PROPOSED RETAIL DEVELOPMENT
580 LAKE ROAD
ANDOVER, TOLLAND COUNTY, CONNECTICUT

REVISIONS No.	Date	Desc.
1.	12/10/2021	REVISED PER HEALTH DEPARTMENT COMMENTS

Designed	S.E.L.
Drawn	R.R.F.
Reviewed	K.M.M.
Scale	NONE
Project No.	2101726
Date	11/18/2021
CAD File: DN210172601	

Title
DETAILS SHEET

Sheet No.
DN-3

© 2021 BL COMPANIES, INC. THESE DRAWINGS SHALL NOT BE UTILIZED BY ANY PERSON, FIRM OR CORPORATION WITHOUT THE SPECIFIC WRITTEN PERMISSION OF BL COMPANIES.

FOR PERMITTING PURPOSES ONLY
NOT RELEASED FOR CONSTRUCTION

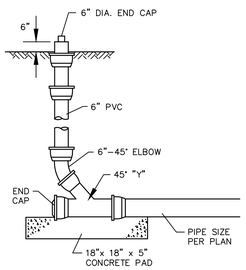

CLEANOUT IN LANDSCAPED AREA

N.T.S BLSS-007

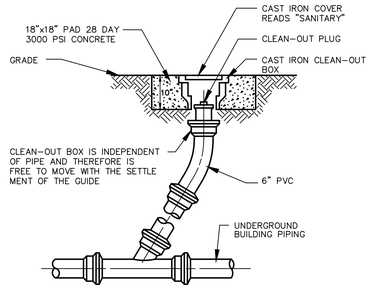

CLEANOUT IN PAVED AREA

N.T.S BLSS-008

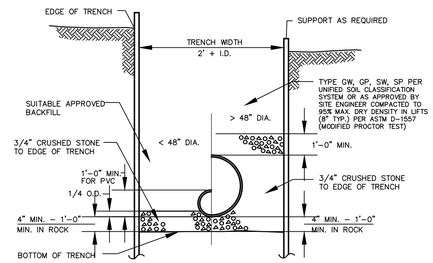

TYPICAL STORM SEWER TRENCH SECTION

N.T.S. BLDD-004

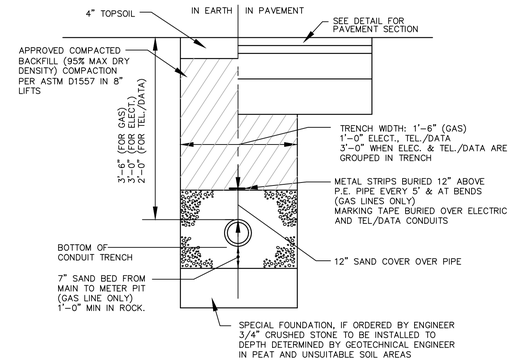

ELECTRICAL, TELEPHONE AND GAS TRENCH DETAIL

N.T.S. BLUD-001

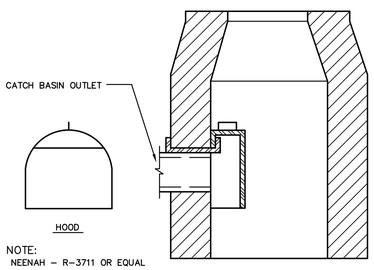

NOTE:
NEENAH - R-3711 OR EQUAL

HOODED OUTLET

N.T.S.

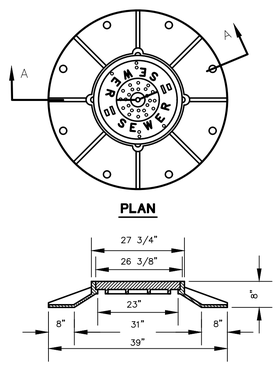

NOTE:
FRAME & GRATE TO BE CAMPBELL FOUNDRY COMPANY-PATTERN NUMBER 1221 WITHOUT COVER VENT HOLES

STANDARD MANHOLE FRAME AND COVER

N.T.S BLSS-002

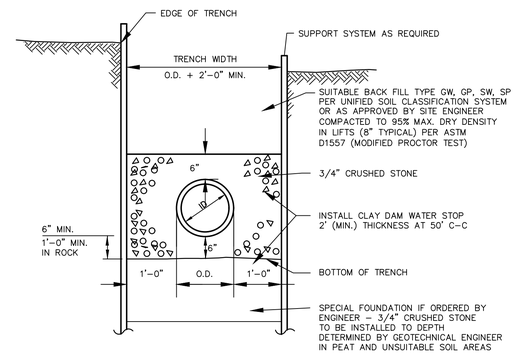

TYPICAL SANITARY SEWER TRENCH SECTION

N.T.S BLSS-010

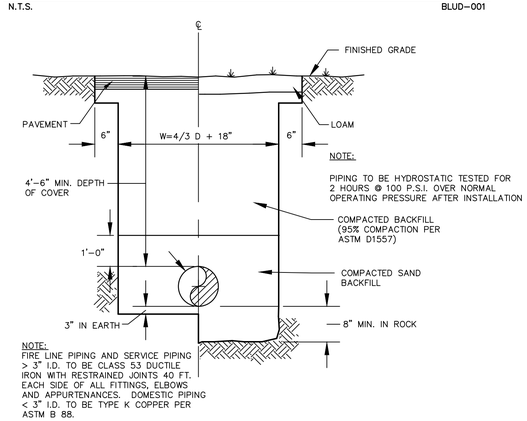

NOTE:
PIPING TO BE HYDROSTATIC TESTED FOR 2 HOURS @ 100 P.S.I. OVER NORMAL OPERATING PRESSURE AFTER INSTALLATION

NOTE:
FIRE LINE PIPING AND SERVICE PIPING > 3" I.D. TO BE CLASS 53 DUCTILE IRON WITH RESTRAINED JOINTS 40 FT. EACH SIDE OF ALL FITTINGS, ELBOWS AND APPURTENANCES. DOMESTIC PIPING < 3" I.D. TO BE TYPE K COPPER PER ASTM B 88.

TYPICAL WATER SERVICE TRENCH DETAIL

N.T.S. BLWD-005

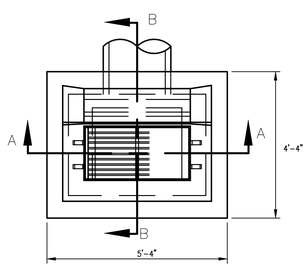

NOTE:
1. DRAINAGE OPENINGS IN 4 WALLS AT OR IMMEDIATELY ABOVE THE BOTTOM OF THE PERVIOUS BACKFILL.
2. INSTALL 6" THICK BEDDING LAYER OF 3/4" CRUSHED STONE AT EACH CATCH BASIN LOCATION.

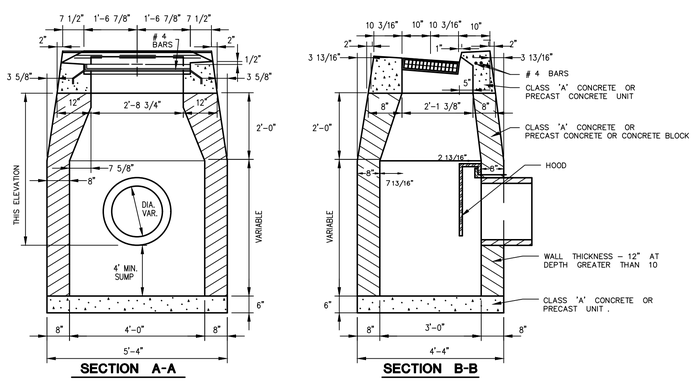

TYPE "C" CATCH BASIN WITH HOOD

N.T.S.

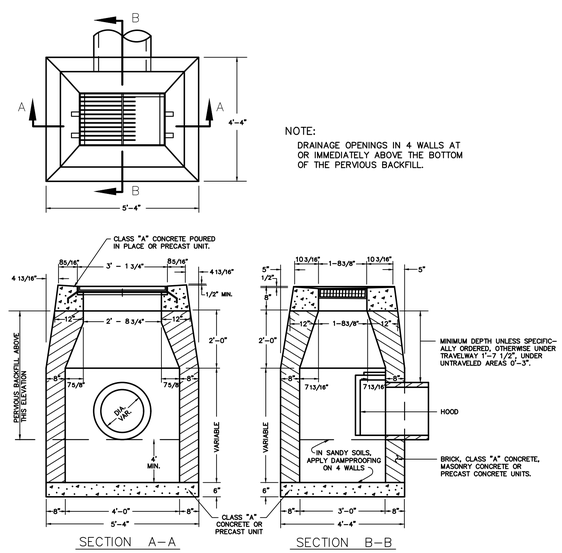

NOTE:
DRAINAGE OPENINGS IN 4 WALLS AT OR IMMEDIATELY ABOVE THE BOTTOM OF THE PERVIOUS BACKFILL.

TYPE "C-L" CATCH BASIN WITH HOOD

N.T.S.

Architecture
Engineering
Environmental
Land Surveying
BL Companies
100 Constitution Plaza, 10th Floor
Hartford, CT 06103
(860) 249-2200
(860) 249-2400 Fax

STATE OF CONNECTICUT
LICENSED PROFESSIONAL ENGINEER

PROPOSED RETAIL DEVELOPMENT
580 LAKE ROAD
ANDOVER, TOLLAND COUNTY, CONNECTICUT

REVISIONS

No.	Date	Desc.
1.	12/10/2021	REVISED PER HEALTH DEPARTMENT COMMENTS

Designed	S.E.L.
Drawn	R.R.F.
Reviewed	K.M.M.
Scale	NONE
Project No.	2101726
Date	11/18/2021
CAD File: DN210172601	

Title
DETAILS SHEET

Sheet No.
DN-4

12/9/2021, SEAGERC, G:\JOBS\1101-2101726\DWG\DN210172601.DWG-DN-4.DWG
© 2021 BL COMPANIES, INC. THESE DRAWINGS SHALL NOT BE UTILIZED BY ANY PERSON, FIRM OR CORPORATION WITHOUT THE SPECIFIC WRITTEN PERMISSION OF BL COMPANIES.

FOR PERMITTING PURPOSES ONLY
NOT RELEASED FOR CONSTRUCTION

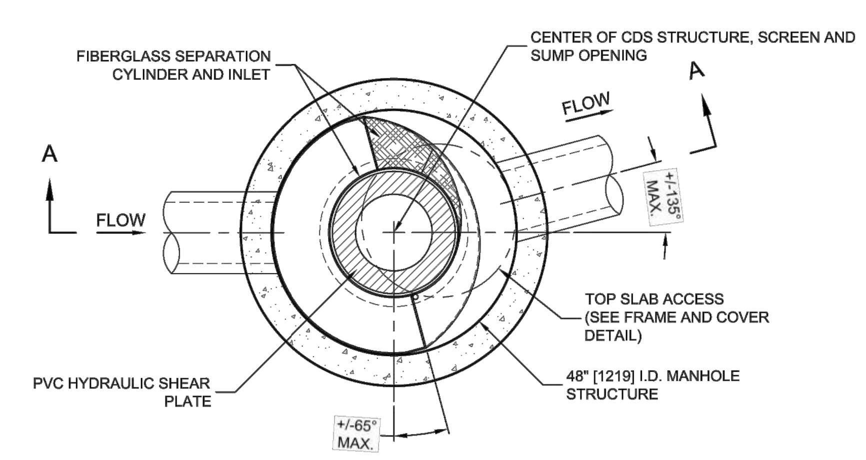

PLAN VIEW B-B
N.T.S.

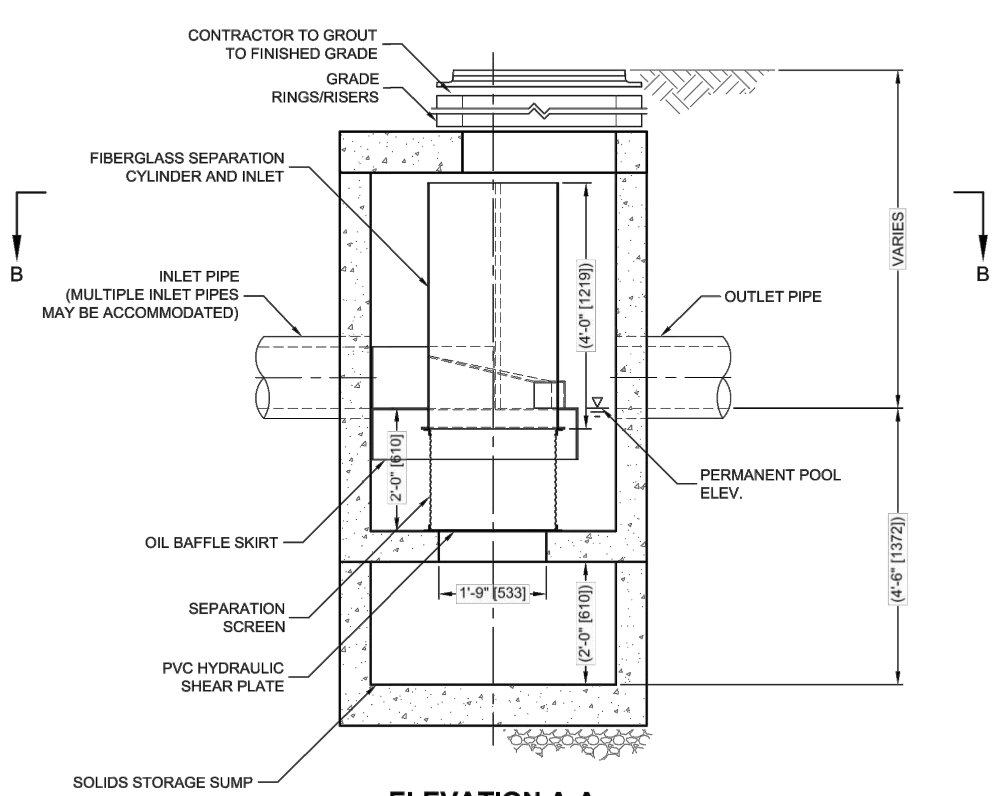

ELEVATION A-A
N.T.S.

CDS®
THIS PRODUCT MAY BE PROTECTED BY ONE OR MORE OF THE FOLLOWING U.S. PATENTS: 5,788,848; 5,641,720; 6,511,595; 6,581,783; RELATED FOREIGN PATENTS, OR OTHER PATENTS PENDING.

C:\USERS\SCHLACHTERH\DESKTOP\CDS DETAILS 180 MICRON SIZING\ACAD\CDS2015-4-C-DTL.DWG 5/19/2014 5:16 PM

CDS2015-4-C DESIGN NOTES

THE STANDARD CDS2015-4-C CONFIGURATION IS SHOWN. ALTERNATE CONFIGURATIONS ARE AVAILABLE AND ARE LISTED BELOW. SOME CONFIGURATIONS MAY BE COMBINED TO SUIT SITE REQUIREMENTS.

	CONFIGURATION DESCRIPTION
	GRATED INLET ONLY (NO INLET PIPE)
	GRATED INLET WITH INLET PIPE OR PIPES
CB(HDS)-3	CURB INLET ONLY (NO INLET PIPE)
CB(HDS)-2	CURB INLET WITH INLET PIPE OR PIPES
	SEPARATE OIL BAFFLE (SINGLE INLET PIPE REQUIRED FOR THIS CONFIGURATION)
	SEDIMENT WEIR FOR NJDEP / NJCAT CONFORMING UNITS

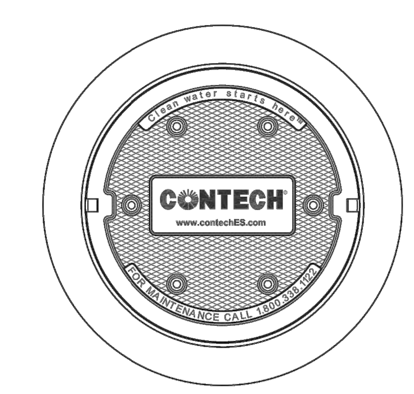

FRAME AND COVER
(DIAMETER VARIES)
N.T.S.

SITE SPECIFIC DATA REQUIREMENTS

CB(HDS)-2
- CURB INLET WITH INLET PIPE
- WQF=0.8CFS
- PEAK FLOW RATE=5.54CFS

CB(HDS)-3
- CURB INLET WITH NO INLETS
- WQF=0.14CFS
- PEAK FLOW RATE=0.83CFS

GENERAL NOTES
1. CONTECH TO PROVIDE ALL MATERIALS UNLESS NOTED OTHERWISE.
2. DIMENSIONS MARKED WITH ( ) ARE REFERENCE DIMENSIONS. ACTUAL DIMENSIONS MAY VARY.
3. FOR FABRICATION DRAWINGS WITH DETAILED STRUCTURE DIMENSIONS AND WEIGHTS, PLEASE CONTACT YOUR CONTECH ENGINEERED SOLUTIONS LLC REPRESENTATIVE. www.contechES.com
4. CDS WATER QUALITY STRUCTURE SHALL BE IN ACCORDANCE WITH ALL DESIGN DATA AND INFORMATION CONTAINED IN THIS DRAWING.
5. STRUCTURE SHALL MEET AASHTO HS20 AND CASTINGS SHALL MEET HS20 (AASHTO M 306) LOAD RATING, ASSUMING GROUNDWATER ELEVATION AT, OR BELOW, THE OUTLET PIPE INVERT ELEVATION. ENGINEER OF RECORD TO CONFIRM ACTUAL GROUNDWATER ELEVATION.
6. PVC HYDRAULIC SHEAR PLATE IS PLACED ON SHELF AT BOTTOM OF SCREEN CYLINDER. REMOVE AND REPLACE AS NECESSARY DURING MAINTENANCE CLEANING.

INSTALLATION NOTES
A. ANY SUB-BASE, BACKFILL DEPTH, AND/OR ANTI-FLOTATION PROVISIONS ARE SITE-SPECIFIC DESIGN CONSIDERATIONS AND SHALL BE SPECIFIED BY ENGINEER OF RECORD.
B. CONTRACTOR TO PROVIDE EQUIPMENT WITH SUFFICIENT LIFTING AND REACH CAPACITY TO LIFT AND SET THE CDS MANHOLE STRUCTURE (LIFTING CLUTCHES PROVIDED).
C. CONTRACTOR TO ADD JOINT SEALANT BETWEEN ALL STRUCTURE SECTIONS, AND ASSEMBLE STRUCTURE.
D. CONTRACTOR TO PROVIDE, INSTALL, AND GROUT PIPES. MATCH PIPE INVERTS WITH ELEVATIONS SHOWN.
E. CONTRACTOR TO TAKE APPROPRIATE MEASURES TO ASSURE UNIT IS WATER TIGHT, HOLDING WATER TO FLOWLINE INVERT MINIMUM. IT IS SUGGESTED THAT ALL JOINTS BELOW PIPE INVERTS ARE GROUTED.

CONTECH® ENGINEERED SOLUTIONS LLC
www.contechES.com
9025 Centre Pointe Dr., Suite 400, West Chester, OH 45069
800-338-1122 513-645-7000 513-645-7993 FAX

CDS2015-4-C
INLINE CDS
STANDARD DETAIL

HYDRODYNAMIC SEPARATOR (CB(HDS)-2 and CB(HDS)-3)

N.T.S

Architecture
Engineering
Environmental
Land Surveying
BL Companies
100 Constitution Plaza, 10th Floor
Hartford, CT 06103
(860) 249-2200
(860) 249-2400 Fax

STATE OF CONNECTICUT – KIMBERLY M. MASLIN – No. 0028028 – LICENSED PROFESSIONAL ENGINEER

PROPOSED RETAIL DEVELOPMENT
580 LAKE ROAD
ANDOVER, TOLLAND COUNTY, CONNECTICUT

REVISIONS

No.	Date	Desc.
1.	12/10/2021	REVISED PER HEALTH DEPARTMENT COMMENTS

Designed	S.E.L.
Drawn	S.E.L.
Reviewed	K.M.M.
Scale	NONE
Project No.	2101726
Date	11/18/2021
CAD File:	DN210172601

Title
DETAILS SHEET

Sheet No.
DN-5

Xref (s): ; BD210009801 ; BD210172601

12/9/2021, SLECLERC, G:\JOBS21\16\2101726\DWG\DN210172601.DWG.DN-5 24X36.

© 2021 BL COMPANIES, INC. THESE DRAWINGS SHALL NOT BE UTILIZED BY ANY PERSON, FIRM OR CORPORATION WITHOUT THE SPECIFIC WRITTEN PERMISSION OF BL COMPANIES.

FOR PERMITTING PURPOSES ONLY
NOT RELEASED FOR CONSTRUCTION

4'x8'x4' GALLEY H-20 LEACHING CHAMBER

GALLEY DESIGN SPECIFICATIONS CONFORMS TO LATEST: ASTM DESIGNATION C913

NOTES:

1. PIPE INLET LOCATIONS HAVE 4" DIAMETER KNOCKOUTS, TYPICAL. CUSTOM KNOCKOUTS CAN BE CAST ON REQUEST.
2. REINFORCING STEEL DEFORMED BARS CONFORM TO LATEST ASTM SPECIFICATION A615.
3. CONCRETE COMPRESSIVE STRENGTH- 4000 PSI AT 28 DAYS.
4. METHOD OF MANUFACTURE: WET CAST.
5. SECTION IS MONOLITHIC.
6. THE GALLEY IS DSIGNED FOR HS-20 LOADING w/18" OF SOIL COVER.

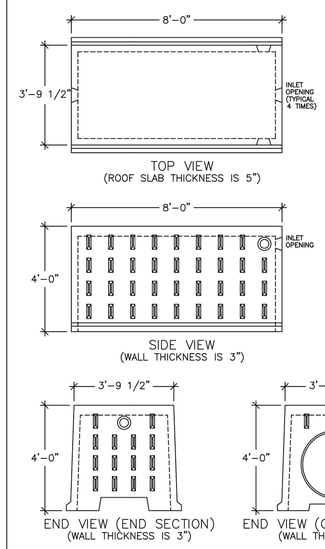

WEIGHT CHART

PRODUCT	APPROX WEIGHT
4'x8'x4' GALLEY	4200 LBS.

LEACHING DATA

FLOW LINE (INCHES)	LEACHING (Gal/LF)	LEACHING (FT^2/UNIT)	INSIDE CAPACITY (GALLONS)
38	9.2	73.6	700

UNITED CONCRETE PRODUCTS INC.
173 CHURCH STREET
YALESVILLE, CT 06492
TEL. 800 234-3119
(203) 269-3119
FAX. (203) 265-4941

SUBSURFACE DETENTION SYSTEM #1

N.T.S

Architecture
Engineering
Environmental
Land Surveying
BL Companies
100 Constitution Plaza, 10th Floor
Hartford, CT 06103
(860) 249-2200
(860) 249-2400 Fax

STATE OF CONNECTICUT
CHRISTOPHER M. KNAPP
No. PEC0003
LICENSED
PROFESSIONAL ENGINEER

PROPOSED RETAIL DEVELOPMENT
580 LAKE ROAD
ANDOVER, TOLLAND COUNTY, CONNECTICUT

No.	REVISIONS Date	Desc.
1.	12/10/2021	REVISED PER HEALTH DEPARTMENT COMMENTS

Designed	S.E.L.
Drawn	S.E.L.
Reviewed	K.M.M.
Scale	NONE
Project No.	2101726
Date	11/18/2021

CAD File: DN210172601

Title

DETAILS SHEET

Sheet No.

DN-6

Xref Ot : HD210605901 : HD210172601

12/9/2021, SELEARIC, G:\HDB\21\01\2101726\DWG\DN210172601.DWG,DN-6,1434%

© 2021 BL COMPANIES, INC. THESE DRAWINGS SHALL NOT BE UTILIZED BY ANY PERSON, FIRM OR CORPORATION WITHOUT THE SPECIFIC WRITTEN PERMISSION OF BL COMPANIES.

FOR PERMITTING PURPOSES ONLY
NOT RELEASED FOR CONSTRUCTION

R1 - SERIES

R1-1 — STOP

LEGEND - WHITE
BACKGROUND - RED

AREA (SQ. FT)	SIZE (INCHES)	CONN. D.O.T. #	POSTS	ALUM. THK.
1.85	18	31-0532	1	.080
5.19	30	31-0552	1	.080
7.98	36	31-0553	1	.080
13.3	48	31-0557	2	.100

R1-2 — YIELD

LEGEND - RED
BACKGROUND -WHITE

AREA (SQ. FT)	SIZE (INCHES)	CONN. D.O.T. #	POSTS	ALUM. THK.
0.97	18	31-0520	1	.080
3.90	36	31-0523	1	.080
6.77	48	31-0522	2	.100
10.83	60	31-0528	2	.100

R1-3P — ALL-WAY

LEGEND - WHITE
BACKGROUND - RED

AREA (SQ. FT)	SIZE (INCHES)	CONN. D.O.T. #	POSTS	ALUM. THK.
0.75	18X6	31-0508		.080

R2 - SERIES

R2-1 — SPEED LIMIT 00

AREA (SQ. FT)	SIZE (INCHES)	CONN. D.O.T. #	POSTS	ALUM. THK.
5.00	24X30	31-5505	1	.080
7.50	30X36	31-5504	1	.080
12.00	36X48	31-5506	2	.100
20.00	48X60	31-5507	2	.100

R2-4a — SPEED LIMIT 00 MINIMUM 00

AREA (SQ. FT)	SIZE (INCHES)	CONN. D.O.T. #	POSTS	ALUM. THK.
32	48X96	31-5510	2	.125

R3 - SERIES

R3-1

LEGEND - BLACK
BACKGROUND - WHITE
CIRCLE & DIAGONAL - RED

AREA (SQ. FT)	SIZE (INCHES)	CONN. D.O.T. #	POSTS	ALUM. THK.
4.00	24X24	31-1604	1	.080
9.00	36X36	31-1627	2	.080

R3-5 — ONLY / ONLY — 31-0183 31-0184

AREA (SQ. FT)	SIZE (INCHES)	CONN. D.O.T. #	POSTS	ALUM. THK.
7.50	30X36		1	.080

R3-6 — ONLY

AREA (SQ. FT)	SIZE (INCHES)	CONN. D.O.T. #	POSTS	ALUM. THK.
7.50	30X36	31-0175	1	.080

R3-8 — ONLY / ONLY — 31-0282 31-0283

AREA (SQ. FT)	SIZE (INCHES)	CONN. D.O.T. #	POSTS	ALUM. THK.
7.50	36X30		2	.080

R3-8b — ONLY ONLY

AREA (SQ. FT)	SIZE (INCHES)	CONN. D.O.T. #	POSTS	ALUM. THK.
10.00	48X30	31-0302	2	.100

R3-2

LEGEND - BLACK
BACKGROUND - WHITE
CIRCLE & DIAGONAL - RED

AREA (SQ. FT)	SIZE (INCHES)	CONN. D.O.T. #	POSTS	ALUM. THK.
4.00	24X24	31-1603	1	.080
9.00	36X36	31-1629	2	.080

R3-6 — 31-0157 31-0158

AREA (SQ. FT)	SIZE (INCHES)	CONN. D.O.T. #	POSTS	ALUM. THK.
7.50	30X36		1	.080

R3-8 — ONLY ONLY

AREA (SQ. FT)	SIZE (INCHES)	CONN. D.O.T. #	POSTS	ALUM. THK.
7.50	36X30	31-0290	1	.080

R3-8 — ONLY — 31-0295 31-0219

AREA (SQ. FT)	SIZE (INCHES)	CONN. D.O.T. #	POSTS	ALUM. THK.
7.50	36X30		2	.080

R3-8b — ONLY / ONLY — 31-0307 31-0372

AREA (SQ. FT)	SIZE (INCHES)	CONN. D.O.T. #	POSTS	ALUM. THK.
10.00	48X30		2	.100

R3-3 — NO TURNS

AREA (SQ. FT)	SIZE (INCHES)	CONN. D.O.T. #	POSTS	ALUM. THK.
4.00	24X24	31-1648	1	.080
9.00	36X36	31-1647	2	.080

R3-7 — LEFT LANE MUST TURN LEFT

AREA (SQ. FT)	SIZE (INCHES)	CONN. D.O.T. #	POSTS	ALUM. THK.
6.25	30X30	31-0117	1	.080
9.00	36X36	31-0120	2	.080

R3-8 — ONLY / ONLY — 31-0222 31-0223

AREA (SQ. FT)	SIZE (INCHES)	CONN. D.O.T. #	POSTS	ALUM. THK.
6.25	30X30		1	.080

R3-8 — ONLY

AREA (SQ. FT)	SIZE (INCHES)	CONN. D.O.T. #	POSTS	ALUM. THK.
8.75	42X30	31-0279	2	.100

R3-8b — ONLY

AREA (SQ. FT)	SIZE (INCHES)	CONN. D.O.T. #	POSTS	ALUM. THK.
8.75	42X30	31-0334	2	.100

R3-4

LEGEND - BLACK
BACKGROUND - WHITE
CIRCLE & DIAGONAL - RED

AREA (SQ. FT)	SIZE (INCHES)	CONN. D.O.T. #	POSTS	ALUM. THK.
4.00	24X24	31-1622	1	.080
9.00	36X36	31-1632	2	.080

R3-7 — RIGHT LANE MUST TURN RIGHT

AREA (SQ. FT)	SIZE (INCHES)	CONN. D.O.T. #	POSTS	ALUM. THK.
6.25	30X30	31-0118	1	.080
9.00	36X36	31-0123	2	.080

R3-8 — ONLY / ONLY — 31-0262 31-0261

AREA (SQ. FT)	SIZE (INCHES)	CONN. D.O.T. #	POSTS	ALUM. THK.
6.25	30X30		1	.080

R3-8b — ONLY / ONLY — 31-0370 31-0371

AREA (SQ. FT)	SIZE (INCHES)	CONN. D.O.T. #	POSTS	ALUM. THK.
8.75	42X30		2	.100

R4 - SERIES

R4-1 — DO NOT PASS

AREA (SQ. FT)	SIZE (INCHES)	CONN. D.O.T. #	POSTS	ALUM. THK.
5.00	24X30	31-1502	1	.080

R4-16 — KEEP RIGHT EXCEPT TO PASS

AREA (SQ. FT)	SIZE (INCHES)	CONN. D.O.T. #	POSTS	ALUM. THK.
20.00	48X60	31-1574	2	.100

R4-3 — SLOWER TRAFFIC KEEP RIGHT

AREA (SQ. FT)	SIZE (INCHES)	CONN. D.O.T. #	POSTS	ALUM. THK.
5.00	24X30	31-1562	1	.080
20.00	48X60	31-1564	2	.100

R4-7

AREA (SQ. FT)	SIZE (INCHES)	CONN. D.O.T. #	POSTS	ALUM. THK.
5.00	24X30	31-1526	1	.080
12.00	36X48	31-1536	2	.100
20.00	48X60	31-1546	2	.100

R5 - SERIES

R5-1 — DO NOT ENTER

LEGEND - WHITE
BACKGROUND - WHITE
CIRCLE - RED

AREA (SQ. FT)	SIZE (INCHES)	CONN. D.O.T. #	POSTS	ALUM. THK.
6.25	30X30	31-1119	1	.080
9.00	36X36	31-1120	2	.080
16.00	48X48	31-1121	2	.100

R5-10a(CT) — NO PEDESTRIANS BICYCLES MOTOR BIKES MOTOR SCOOTERS

AREA (SQ. FT)	SIZE (INCHES)	CONN. D.O.T. #	POSTS	ALUM. THK.
9.00	36X36	31-1775	2	.100

R5-1a — WRONG WAY

LEGEND - WHITE
BACKGROUND - RED

AREA (SQ. FT)	SIZE (INCHES)	CONN. D.O.T. #	POSTS	ALUM. THK.
6.00	36X24	31-1122	2	.080
8.75	42X30	31-1123	2	.100

R5-11 — AUTHORIZED VEHICLES ONLY

AREA (SQ. FT)	SIZE (INCHES)	CONN. D.O.T. #	POSTS	ALUM. THK.
5.00	30X24	31-1790	1	.080
20.00	48X36	31-1792	2	.100

R5-10a(CT) — PROHIBITED / VEH OVER 8FT HIGH / TRAILERS / COMMERCIAL VEH

LEGEND - BLACK
TOP SECTION BACKGROUND - YELLOW
BOTTON SECTION BACKGROUND - WHITE

AREA (SQ. FT)	SIZE (INCHES)	CONN. D.O.T. #	POSTS	ALUM. THK.
32.50	60X78	31-1719	2	.125

R5-10c — NO PEDESTRIANS

AREA (SQ. FT)	SIZE (INCHES)	CONN. D.O.T. #	POSTS	ALUM. THK.
2.00	24X12	31-1774	1	.080

R6 - SERIES

R6-1 — ONE WAY

AREA (SQ. FT)	SIZE (INCHES)	CONN. D.O.T. #	POSTS	ALUM. THK.
3.00	36X12	31-1188	1	.080
6.75	54X18	31-1189	2	.100

R6-1 — ONE WAY

AREA (SQ. FT)	SIZE (INCHES)	CONN. D.O.T. #	POSTS	ALUM. THK.
3.00	36X12	31-1177	1	.080
6.75	54X18	31-1178	2	.100

R7 - SERIES

R7-1 — NO PARKING ANY TIME

(R) (D) (L)

LEGEND - RED
BACKGROUND - WHITE

AREA (SQ. FT)	SIZE (INCHES)	CONN. D.O.T. #	POSTS	ALUM. THK.
1.50	12X18	31-0630	1	.080

R7-2a — NO PARKING 0:00 AM TO 0:00 PM

VARIABLE TIMES
(R) (D) (L)

LEGEND - RED
BACKGROUND - WHITE

AREA (SQ. FT)	SIZE (INCHES)	CONN. D.O.T. #	POSTS	ALUM. THK.
1.50	12X18	31-0603	1	.080

R8 - SERIES

R8-7 — EMERGENCY STOPPING ONLY

AREA (SQ. FT)	SIZE (INCHES)	CONN. D.O.T. #	POSTS	ALUM. THK.
12.00	48X36	31-0670	2	.100

R9 - SERIES

R9-3

LEGEND - BLACK
BACKGROUND - WHITE
CIRCLE & DIAGONAL - RED

AREA (SQ. FT)	SIZE (INCHES)	CONN. D.O.T. #	POSTS	ALUM. THK.
2.25	18X18	31-1705	1	.080
4.00	24x24	31-1769	1	.080
6.25	30x30	31-1770	1	.080

R9-3a — NO PEDESTRIAN CROSSING

AREA (SQ. FT)	SIZE (INCHES)	CONN. D.O.T. #	POSTS	ALUM. THK.
1.50	12X18	31-1702	1	.080

R10 - SERIES

R10-6 — STOP HERE ON RED — 31-0801 31-0802

AREA (SQ. FT)	SIZE (INCHES)	CONN. D.O.T. #	POSTS	ALUM. THK.
6.00	24X36		1	.080

R10-11b — NO TURN ON RED

AREA (SQ. FT)	SIZE (INCHES)	CONN. D.O.T. #	POSTS	ALUM. THK.
9.00	36X36	31-0816	2	.080

R10-11c(CT) — RIGHT TURN ON RED FROM RIGHT LANE ONLY

AREA (SQ. FT)	SIZE (INCHES)	CONN. D.O.T. #	POSTS	ALUM. THK.
7.50	30X36	31-0847	1	.080

R10-7 — DO NOT BLOCK INTERSECTION

AREA (SQ. FT)	SIZE (INCHES)	CONN. D.O.T. #	POSTS	ALUM. THK.
5.00	24X30	31-0806	1	.080

R10-10L — LEFT TURN SIGNAL

AREA (SQ. FT)	SIZE (INCHES)	CONN. D.O.T. #	POSTS	ALUM. THK.
7.50	30X36	31-0852	1	.080

R10-11a — NO TURN ON RED

AREA (SQ. FT)	SIZE (INCHES)	CONN. D.O.T. #	POSTS	ALUM. THK.
7.50	30X36	31-0830	1	.080
12.00	36X48	31-0819	2	.100

R11 - SERIES

R11-1 — KEEP OFF MEDIAN

AREA (SQ. FT)	SIZE (INCHES)	CONN. D.O.T. #	POSTS	ALUM. THK.
5.00	24X30	31-1915	1	.080
20.00	48X60	31-1918	2	.100

RETROREFLECTIVE STRIP

LEGEND - N/A
BACKGROUND - RED

AREA (SQ. FT)	SIZE (INCHES)	CONN. D.O.T. #	POSTS	ALUM. THK.
1.00	4X48	31-5003	1	.080
2.00	4X72	31-5004	1	.080

NOTES:

1. THE LEGEND "O.S.T.A." SHALL APPEAR ON ALL R- SERIES SIGNS EXCEPT WHEN SUFFIXED WITH THE LETTER "Z".
2. FOR SPECIFIC SIGN DESIGN CONTACT CONN. D.O.T., DIVISION OF TRAFFIC ENGINEERING.
   FOR BOLT HOLE PATTERN REFER TO FHWA PUBLICATION "STANDARD HIGHWAY SIGNS".
   SIGNS OF DIFFERENT DIMENSIONS TO BE ERECTED ON THE SAME POSTS, OR SPAN/MAST ARM MOUNTED, MAY REQUIRE SPECIAL BOLT HOLE PATTERNS.
3. POSTS - SEE STANDARD SHEET TR-1208_02 - "METAL SIGN POSTS AND SIGN MOUNTING DETAILS."
4. POSTS SHALL BE 4 LBS./FT.
5. SIGNS SHALL BE FABRICATED OF ONE CONTINUOUS PIECE OF SHEET ALUMINUM.
   SPLICING OF SHEET ALUMINUM WILL NOT BE ACCEPTED.
6. FOR OVERHEAD MOUNTED SIGNS, SEE STANDARD SHEET TR-1114_01 - "BONDING AND UTILITY POLE ATTACHMENT DETAILS, SIGN HANGER, "Y" CLAMP DETAIL."

COLORS:

BACKGROUND - WHITE - EXCEPT AS NOTED.
LEGEND - BLACK - EXCEPT AS NOTED.
ALL SIGNS TO USE TYPE IX RETROREFLECTIVE SHEETING.

REV.	DATE	REVISION DESCRIPTION	SHEET NO.
3	12-2018	REVISED RETROREFLECTIVE STRIPS	TR-GS_01
2	10-2018	REVISED R5-11 SIGNS PER MUTCD	TR-GS_01
1	6-2018	NEW SHEET ISSUED	TR-GS_01

THE INFORMATION, INCLUDING ESTIMATED QUANTITIES OF WORK, SHOWN ON THESE SHEETS IS BASED ON LIMITED INVESTIGATIONS BY THE STATE AND IS IN NO WAY WARRANTED TO INDICATE THE CONDITIONS OF ACTUAL QUANTITIES OF WORK WHICH WILL BE REQUIRED.

Plotted Date: 1/16/2019

DESIGNER/DRAFTER: A. MERMELSTEIN
CHECKED BY: B. SCHILLING
NOT TO SCALE

STATE OF CONNECTICUT
DEPARTMENT OF TRANSPORTATION

Filename: ...\CTDOT_TRAFFIC_GS.dgn

SIGNATURE/ BLOCK: OFFICE OF ENGINEERING
APPROVED BY: DATE:

PROJECT TITLE: -

TOWN: -

DRAWING TITLE: SIGN FACE SHEET ALUMINUM (X) R-SERIES TYPICAL SIGN DETAILS

PROJECT NO. -
DRAWING NO. TR-GS_01
SHEET NO.

Architecture Engineering Environmental Land Surveying
BL Companies
100 Constitution Plaza, 10th Floor
Hartford, CT 06103
(860) 249-2200
(860) 249-2400 Fax

PROPOSED RETAIL DEVELOPMENT
580 LAKE ROAD
ANDOVER, TOLLAND COUNTY, CONNECTICUT

REVISIONS No.	Date	Desc.
1.	12/10/2021	REVISED PER HEALTH DEPARTMENT COMMENTS

Designed	S.E.L.
Drawn	S.E.L.
Reviewed	K.M.M.
Scale	NONE
Project No.	2101726
Date	11/18/2021
CAD File:	DN210172601

Title
DETAILS SHEET

Sheet No.
DN-7

Xref (s): ; BD210009801 ; BD210172601

12/9/2021, SLECLERC, G:\JOBS21\16\2101726\DWG\DN210172601.DWG.DN-7 24X36.

© 2021 BL COMPANIES, INC. THESE DRAWINGS SHALL NOT BE UTILIZED BY ANY PERSON, FIRM OR CORPORATION WITHOUT THE SPECIFIC WRITTEN PERMISSION OF BL COMPANIES.

FOR PERMITTING PURPOSES ONLY
NOT RELEASED FOR CONSTRUCTION

TYPICAL METAL SIGN POSTS

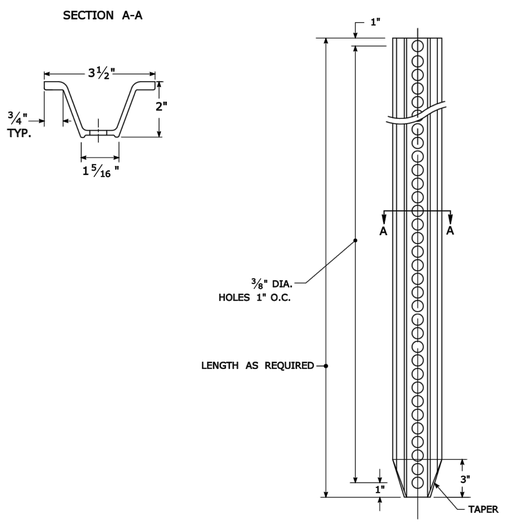

TYPICAL SIGN PANEL ATTACHMENT

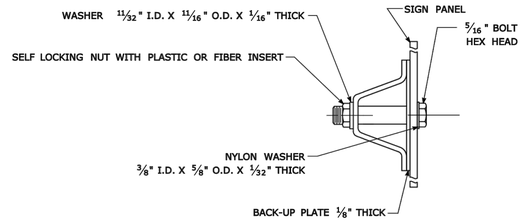

TYPICAL BACK TO BACK SIGN PANEL ATTACHMENT

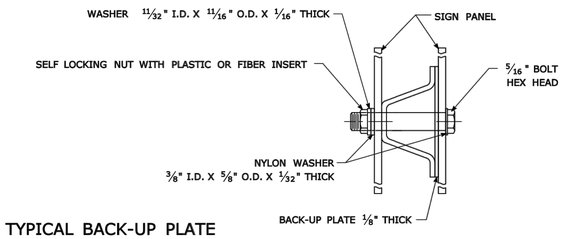

TYPICAL BACK-UP PLATE

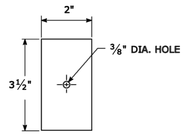

BOLTS - STAINLESS STEEL CONFORMING TO ASTM F593, ALLOY GROUP 1 OR 2 (ALLOY TYPES 304 OR 316).
SELF LOCKING NUTS - STAINLESS STEEL CONFORMING TO ASTM F594, ALLOY GROUP 1 OR 2 (ALLOY TYPES 304 OR 316).
WASHERS - STAINLESS STEEL CONFORMING TO ASTM A240, (ALLOY TYPES 304 OR 316).

METAL DELINEATOR POST

WT./FT. = 1.12 LBS./FT. MIN.

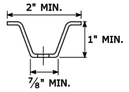

SECTION C-C

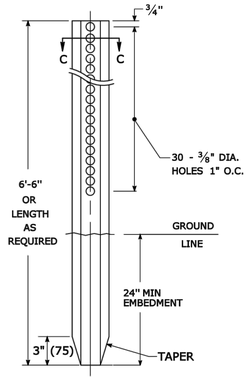

GENERAL NOTES:

1. STEEL FOR DELINEATOR POSTS SHALL BE ASTM A36 STEEL. STEEL FOR ALL OTHER POSTS SHALL CONFORM TO THE MECHANICAL REQUIREMENTS OF ASTM A 499 GRADE 80 AND TO THE CHEMICAL REQUIREMENTS OF ASTM A1 CARBON STEEL TEE RAIL HAVING NOMINAL WEIGHT (MASS) OF 91 LBS. OR GREATER PER LINEAR YARD.
2. AFTER FABRICATION, ALL STEEL POSTS, STRAPS AND PLATES SHALL BE GALVANIZED TO MEET THE REQUIREMENTS OF ASTM A123.
3. WASHERS FOR BREAKAWAY INSTALLATIONS SHALL MEET ASTM F436, TYPE 1.
4. SPACER BAR FOR BREAKAWAY INSTALLATION SHALL CONFORM TO THE MECHANICAL REQUIREMENTS OF ASTM A36.
5. ALL BOLTS, NUTS, AND WASHERS FOR BREAKAWAY INSTALLATIONS SHALL BE GALVANIZED TO MEET THE REQUIREMENTS OF ASTM A153.
6. ALL SIGN POSTS SHALL HAVE BREAKAWAY FEATURES THAT MEET AASHTO REQUIREMENTS CONTAINED IN THE CURRENT "STANDARD SPECIFICATIONS FOR STRUCTURAL SUPPORTS FOR HIGHWAY SIGNS, LUMINAIRES AND TRAFFIC SIGNALS." THE BREAKAWAY FEATURES SHALL BE STRUCTURALLY ADEQUATE TO CARRY THE SIGNS SHOWN IN THE PLANS AT 60 mph WIND LOADINGS. INSTALLATIONS SHALL BE IN ACCORDANCE WITH MANUFACTURERS RECOMMENDATIONS.
7. SIGN POSTS SHALL BE 4 LBS./FT.

BREAKAWAY INSTALLATION

FOR 4 LBS./FT. POSTS

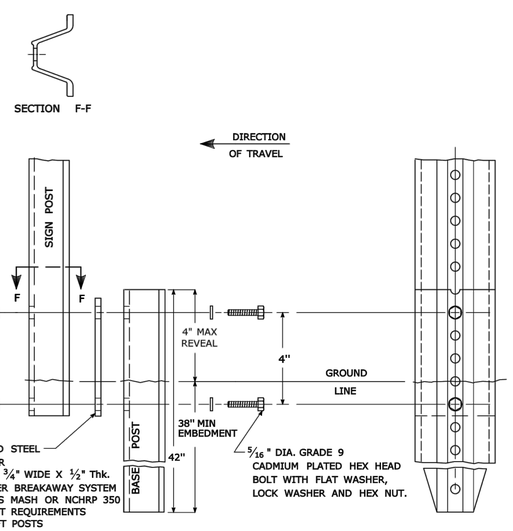

TYPICAL SIGN POST INSTALLATION IN LEDGE

LEDGE SHALL BE REMOVED TO DRIVE THE BASE POST TO A DEPTH OF 38".

HOLE SHALL BE FILLED WITH SUB-BASE MATERIAL AND COMPACTED WITH A TAMPING BAR, OR TECHNIQUE APPROVED BY THE ENGINEER, PRIOR TO BASE POST INSTALLATION.

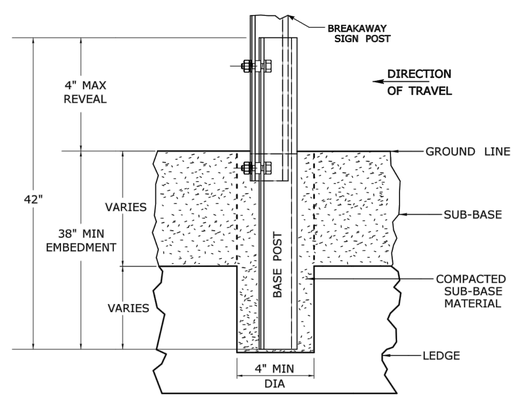

TYPICAL SLEEVE FOR PAVED AREAS

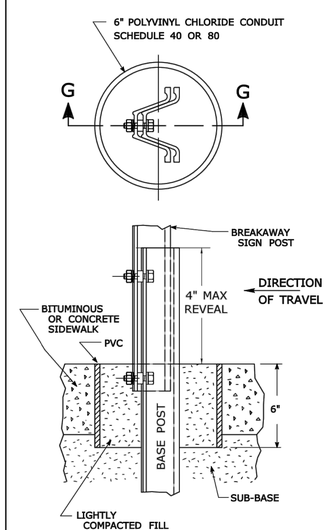

45° MOUNTING BRACKET FOR INSTALLATION OF PARKING SIGNS

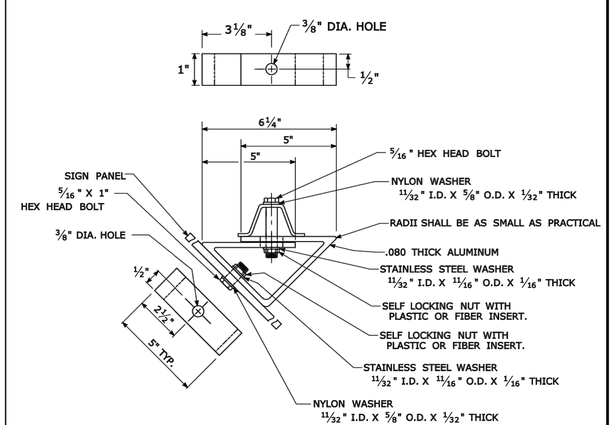

REV.	DATE	REVISION DESCRIPTION
2	6-2017	SIGN POST REVISIONS.
1	2-2011	MINOR REVISIONS.

THE INFORMATION, INCLUDING ESTIMATED QUANTITIES OF WORK, SHOWN ON THESE SHEETS IS BASED ON LIMITED INVESTIGATIONS BY THE STATE AND IS IN NO WAY WARRANTED TO INDICATE THE CONDITIONS OF ACTUAL QUANTITIES OF WORK WHICH WILL BE REQUIRED.

Plotted Date: 6/6/2017

NOT TO SCALE

STATE OF CONNECTICUT
DEPARTMENT OF TRANSPORTATION

Filename: TR-1208_02_May_2017_Revision.dgn Model: TR-1208_02

SUBMITTED BY: NAME/DATE/TIME:
Mark F. Makuch, P.E. 2017.06.07 07:30:30-04'00'
Mary E. Baker, P.E. 2017.06.13 15:28:14-04'00'
APPROVED BY: NAME/DATE/TIME:
Gregory M. Dorosh, P.E. 2017.06.15 09:27:29-04'00'

CTDOT STANDARD SHEET
OFFICE OF ENGINEERING

STANDARD SHEET TITLE:
METAL SIGN POSTS AND SIGN MOUNTING DETAILS

GUIDE SHEET NO.: TR-1208_02

© 2021 BL COMPANIES, INC. THESE DRAWINGS SHALL NOT BE UTILIZED BY ANY PERSON, FIRM OR CORPORATION WITHOUT THE SPECIFIC WRITTEN PERMISSION OF BL COMPANIES.

Architecture
Engineering
Environmental
Land Surveying
BL Companies
100 Constitution Plaza, 10th Floor
Hartford, CT 06103
(860) 249-2200
(860) 249-2400 Fax

STATE OF CONNECTICUT
CURRENTLY VACANT
REGISTERED PROFESSIONAL ENGINEER

PROPOSED RETAIL DEVELOPMENT
580 LAKE ROAD
ANDOVER, TOLLAND COUNTY, CONNECTICUT

REVISIONS
No. Date Desc.
1. 12/10/2021 REVISED PER HEALTH DEPARTMENT COMMENTS

Designed	S.E.L.
Drawn	S.E.L.
Reviewed	K.M.M.
Scale	NONE
Project No.	2101726
Date	11/18/2021
CAD File: DN210172601	

Title
DETAILS SHEET

Sheet No.
DN-8

12/9/2021, SEAELERG, G:\JOBS21\101726\DWG\DN210172601.DWG, DN-8.DGN

FOR PERMITTING PURPOSES ONLY
NOT RELEASED FOR CONSTRUCTION

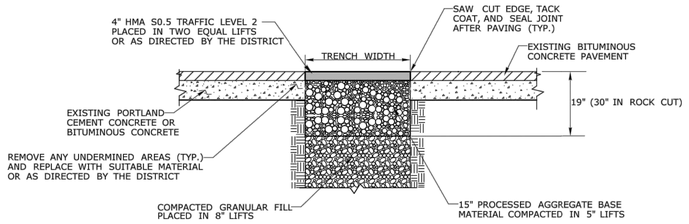

TEMPORARY PAVEMENT REPAIR FOR TRENCH THROUGH OVERLAID PORTLAND CEMENT CONCRETE OR BITUMINOUS CONCRETE PAVEMENT

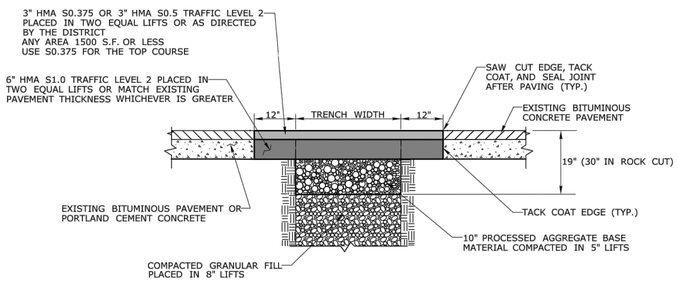

PERMANENT PAVEMENT REPAIR WITHOUT MILLING - THROUGH PORTLAND CEMENT CONCRETE OR BITUMINOUS CONCRETE PAVEMENT

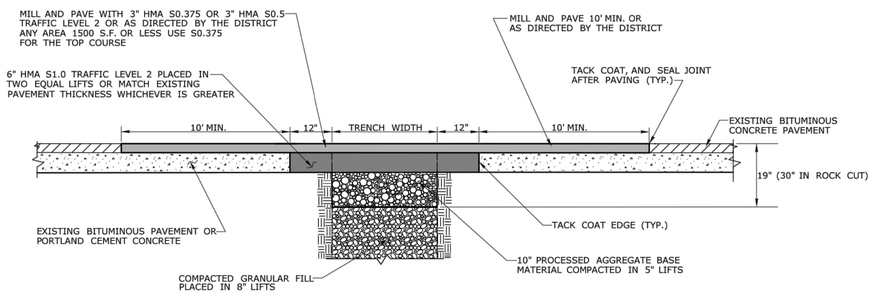

PERMANENT PAVEMENT REPAIR WITH MILLING

GENERAL NOTES:

1. LONGITUDINAL TRENCHING FOR JOINTED CONCRETE PAVEMENT:

   A. IF THE LONGITUDINAL TRENCH FALLS BETWEEN THE SLAB CENTERLINE AND THE EDGE OF SLAB, REMOVE CONCRETE AND BITUMINOUS CONCRETE PAVEMENT FROM THE TRENCH EDGE TO THE EDGE OF ROAD. IF THE LONGITUDINAL TRENCH FALLS BETWEEN THE LONGITUDINAL JOINT AND THE SLAB CENTERLINE, REMOVE THE ENTIRE CONCRETE SLAB AND BITUMINOUS CONCRETE PAVEMENT TO THE EDGE OF ROAD. IN EITHER CASE REBUILD WITH THE FOLLOWING:

   a. PLACE HMA S1.0 TRAFFIC LEVEL 2 IN TWO EQUAL 4" - 5" LIFTS TO MATCH EXISTING CONCRETE PAVEMENT THICKNESS
   b. PLACE HMA S0.5 TRAFFIC LEVEL 2 IN 2" - 3" LIFTS TO MATCH EXISTING BITUMINOUS CONCRETE PAVEMENT THICKNESS, WITH THE FINAL LIFT BEING 2"

2. TRANSVERSE TRENCHING FOR JOINTED CONCRETE PAVEMENT:

TABLE 1

TOTAL SLAB LENGTH (L)	MIN. LENGTH REMAINING
40' OR LONGER	1/4 L
15' - 40'	10'
15' OR SHORTER	REBUILD TO NEAREST JOINT

   A. FOR TRANSVERSE TRENCHES, THE MINIMUM SLAB LENGTH AS SHOWN IN TABLE 1 SHALL BE LEFT IN PLACE TO THE NEAREST TRANSVERSE JOINT. IF THIS CRITERIA CANNOT BE MET, THE EXISTING SLAB AREA FROM THE TRENCH EDGE TO THE NEAREST TRANSVERSE JOINT SHALL BE REMOVED AND REBUILT AS FOLLOWS:

   a. PLACE HMA S1.0 TRAFFIC LEVEL 2 IN TWO EQUAL 4" - 5" LIFTS TO MATCH EXISTING CONCRETE PAVEMENT THICKNESS
   b. PLACE HMA S0.5 TRAFFIC LEVEL 2 IN 2" - 3" LIFTS TO MATCH EXISTING BITUMINOUS CONCRETE PAVEMENT THICKNESS, WITH THE FINAL LIFT BEING 2"

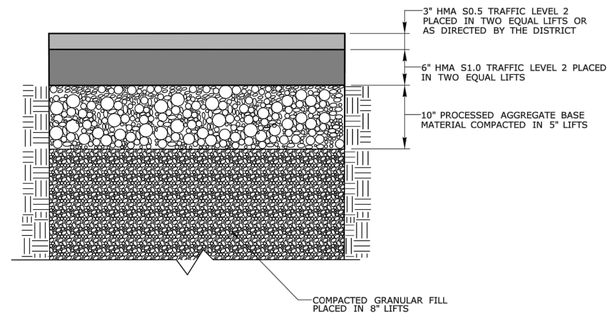

ROADWAY PROFILE

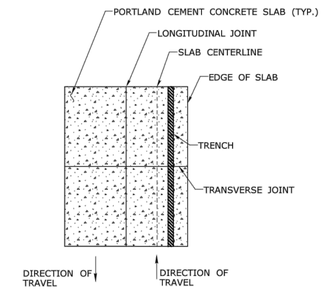

LONGITUDINAL TRENCHING FOR JOINTED CONCRETE PAVEMENT
(SEE NOTE 1)

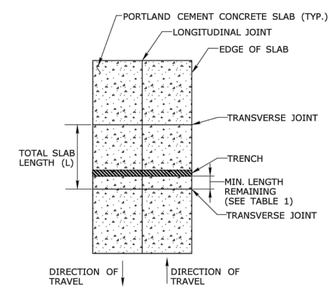

TRANSVERSE TRENCHING FOR JOINTED CONCRETE PAVEMENT
(SEE NOTE 2)

DRAFTER: MS CHECKED BY: EL NO SCALE	HIGHWAY OPERATIONS	OFFICE OF MAINTENANCE OPERATIONS SPECIAL SERVICES AND PLANNING	STATE OF CONNECTICUT DEPARTMENT OF TRANSPORTATION

DRAWING TITLE:

ENCROACHMENT PERMIT - PAVEMENT REPAIR

© 2021 BL COMPANIES, INC. THESE DRAWINGS SHALL NOT BE UTILIZED BY ANY PERSON, FIRM OR CORPORATION WITHOUT THE SPECIFIC WRITTEN PERMISSION OF BL COMPANIES.

Architecture
Engineering
Environmental
Land Surveying
BL Companies
100 Constitution Plaza, 10th Floor
Hartford, CT 06103
(860) 249-2200
(860) 249-2400 Fax

STATE OF CONNECTICUT
SERGEY L. YELKIN
No. 29203
LICENSED PROFESSIONAL ENGINEER

PROPOSED RETAIL DEVELOPMENT
580 LAKE ROAD
ANDOVER, TOLLAND COUNTY, CONNECTICUT

No.	Date	Desc.
1	12/10/2021	REVISED PER HEALTH DEPARTMENT COMMENTS

REVISIONS

Designed	S.E.L.
Drawn	S.E.L.
Reviewed	K.M.M.
Scale	NONE
Project No.	2101726
Date	11/18/2021
CAD File: DN210172601	

Title
DETAILS SHEET

Sheet No.
DN-9

Xref(s) : HB210009001 ; HD210172601

12/9/2021 - SEELKIN - G:\1DRAFT\HB\210172601\DWG\DN210172601.DWG\DN-9.DWG

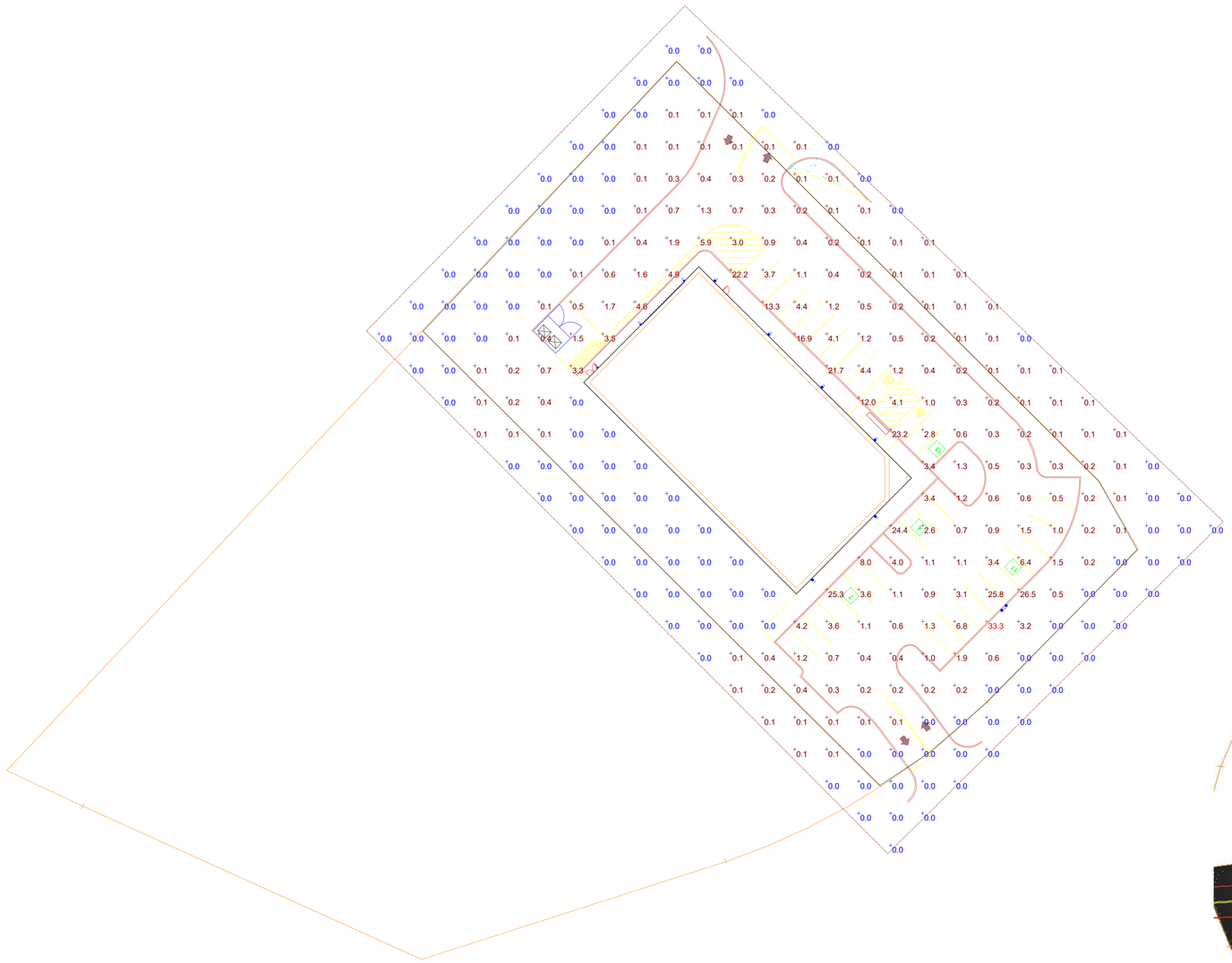

Plan View
Scale - 1" = 30ft

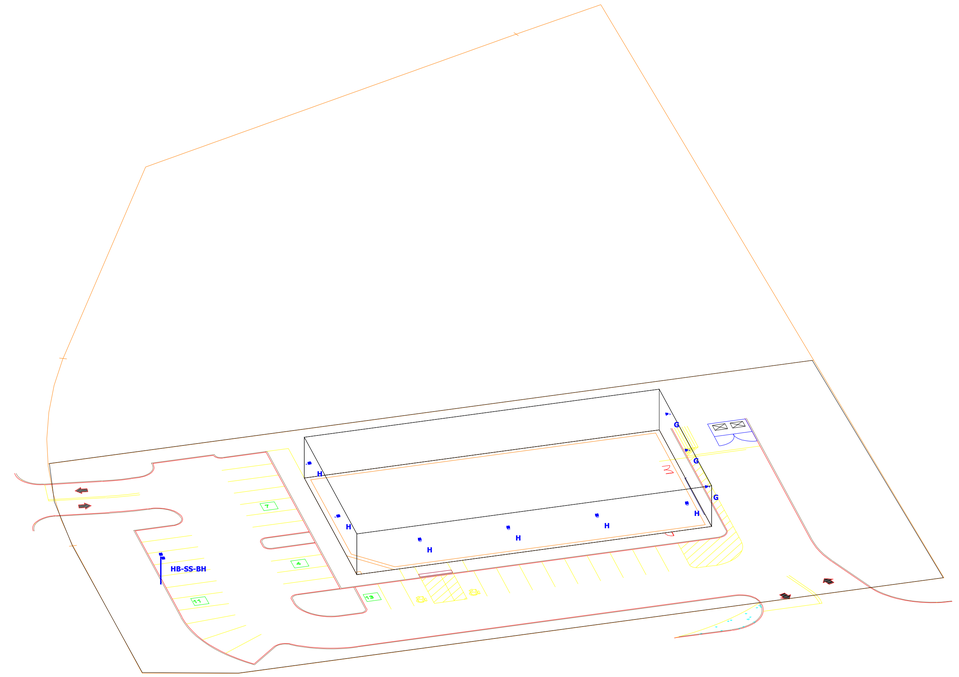

North East View

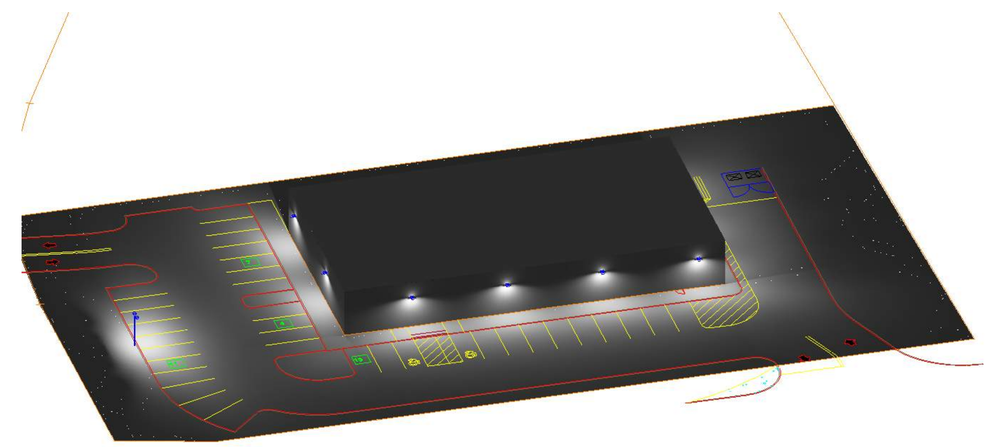

Rendered Photometric

Schedule

Symbol	Label	Quantity	Manufacturer	Description	Lumens Per Lamp	Wattage
	G	3	SHENZHEN SNC OPTO ELECTRONIC CO.,LTD	SNC-FWP01-40CT4A1-40	4861	40.4
	H	6	ASMART LIGHT CO., LTD	PRO-SG11-150WCT3A1	15704	153.3
	HB-SS-BH	1	ASMART LIGHT CO., LTD	TWO PRO-SG11-150WCT3A1 with SIDE SHIELDS	15704	306.6

Luminaire Locations

Label	MH	Orientation	Tilt
G	12.00	315.00	0.00
G	12.00	315.00	0.00
G	12.00	315.00	0.00
H	12.00	129.29	0.00
H	12.00	129.29	0.00
H	12.00	46.85	0.00
H	12.00	46.85	0.00
H	12.00	46.85	0.00
H	12.00	46.85	0.00
HB-SS-BH	12.00	312.51	0.00

STONES RIVER ELECTRIC

Andover, CT
Exterior Photometric Lighting Layout

Designer
Eric Young CSLT, CLCP, CLMC
Date
11/16/2021
Scale
As Shown
Drawing No.
EL - Photometric Layout
Summary

#24005 - Andover, CT - Exterior Photometric Lighting Layout.zip