April 14, 2016

Mr. Jim Cassidy, PE
Hallisey, Pearson & Cassidy
35 Cold Spring Road, Unit #511
Rocky Hill, CT 06067

RE: Traffic Impact Assessment
Pentagon Energy Facility
Andover, Connecticut
Project Number: 1603101

Dear Mr. Cassidy,

Solli Engineering has prepared this assessment to provide an analysis of the potential traffic impacts associated with the proposed Pentagon Energy Facility located at 1010 Route 6 in Andover, Connecticut. The analysis has been completed in accordance with Town of Andover requirements as well as standard traffic engineering methodology. The investigation indicates that this proposed development will not have an adverse impact on the area roadway network.

Project Description:

The property is located at 1010 Route 6 in Andover, Connecticut. The subject parcel consists of a 15.58 acre parcel with approximately 4.7 acres at the southern portion of the parcel proposed to be leased for purposes of developing the proposed Pentagon Energy facility. The site is bounded by Route 6 to the north and industrial property to the east, the Hop River State Park Trail to the south, and undeveloped land to the west. Refer to Figure 1, Site Location Map, for more details on the project location.

The site is proposed to be developed with a natural gas injection station containing sixteen (16) injection stations and associated support equipment, circulation aisles, parking, and utilities. The site is proposed to be accessed from Route 6 via the existing un-signalized site access near the southern property line, which is being improved as part of this project.

The facility is proposed to operate on a twenty-four hour per day schedule on a seasonal basis from November to March each year. The proposed operations will result in truck trips at a rate of ten (10) trucks per hour (5 entering, 5 exiting) and two (2) passenger vehicle trips (1 entering, 1 exiting). The trucks visiting the site are proposed to follow a designated route which will begin at the terminus of Interstate 384 in Bolton, north of the project site, and continue along Route 6 approximately 6.7 miles to the project site. See Figure 2, Truck Route for more details on the proposed truck route.

Traffic Impact Analysis:

<u>Existing Conditions</u>

In the vicinity of the project site, Route 6 is a two-lane, principal arterial that runs east to west with a posted speed limit of 40 miles per hour throughout the study area. Route 6 provides regional access to the surrounding area, with a mix of industrial, commercial, municipal, and residential uses along the corridor. There are no sidewalks along Route 6 in the study area.

Long Hill Road is a two-lane, local roadway that runs north to south with a posted speed limit of 30 miles per hour throughout the study area. Long Hill Road provides local access to the surrounding area, with mostly residential use along the corridor. There are no sidewalks along Long Hill Road in the study area.

Hebron Road is a two-lane, major collector roadway that runs north to south with a posted speed limit of 35 miles per hour throughout the study area. Hebron Road provides local and regional access to the surrounding area, with a mix of commercial, residential, and municipal uses along the corridor. There are no sidewalks along Hebron Road in the study area.

Due to the specialized nature of the operations of this facility, it was determined that all signalized intersections along the proposed truck route would be analyzed during the dominant peak hour, the one with the highest volume of the 24-hour period, to determine the greatest potential impacts of the proposed trips to be generated along the corridor. The Connecticut Department of Transportation publishes 24-hour count data along state roadways every three years. This data was evaluated along Route 6 in the vicinity of the study area to determine the highest hour of traffic volume during the 24-hour period and this was determined to be the AM peak hour.

Turning movement count data was collected in March 2016 during the AM peak hour at two (2) signalized intersections along the proposed truck route. The 2016 existing peak hour volumes are illustrated on Figure 3. The Connecticut Department of Transportation data identified the 2014 average daily traffic (ADT) on Route 6, just north of the project site, to be 17,900 vehicles.

Traffic volumes and speed data were collected on Route 6 in the vicinity of the site. This data was collected using an automatic traffic recorder (ATR) that was placed on Route 6 just north of the project site during April 2016. This study recorded an 85th percentile speed of 46 mph and a bidirectional average daily traffic of 17,130, which is in line with the most recently published 2014 CT DOT ADT volumes in the vicinity.

Proposed Conditions

The anticipated number of trips that will be generated by the proposed project was evaluated based on the established number of truck trips and employee passenger vehicle trips to be generated by the proposed facility. It is anticipated that the proposed project will generate twelve (12) trips (10 truck trips, 2 employee trips) during the AM peak hour with six (6) trips entering the site and six (6) trips exiting the site, as illustrated in Table 1 below.

TABLE 1 – TRIP GENERATION SUMMARY
PENTAGON ENERGY FACILITY

	AM Peak Hour		
	Enter	Exit	Total
Infusion Facility - Delivery Trucks	5	5	10
Infusion Facility - Employees	1	1	2
Total Trips	**6**	**6**	**12**

The anticipated distribution of the site generated trips entering and exiting the site was developed based on the proposed truck route to and from the facility and Interstate 384. The anticipated percent distribution of the new site generated trips is illustrated in Figure 4. The new site generated trips were assigned to the study intersections based on the anticipated percent distributions and the resulting trip assignment is illustrated in Figure 5.

As the proposed development is anticipated to be opened in 2017, background traffic growth is estimated to account for the traffic increase as a result of regional population growth. The Connecticut Department of Transportation data publishes historical AADT (Average Annual Daily Traffic) volumes for State roadways every three years which can be evaluated to determine the annual growth rate of traffic on the roadway. The analysis of the historical AADT on Route 6 in the project area indicates a 0.56% average annual growth between 2008 and 2014. The 2016 existing traffic volumes were projected to the 2017 design year using a conservative 1.0 percent per year growth factor. The 2017 background traffic volumes are illustrated in Figure 6.

The trip assignment volumes illustrated in Figure 4 were combined with the 2017 background volumes illustrated in Figure 6 to develop the 2017 build traffic volumes illustrated in Figure 7.

The Connecticut State Department of Transportation Office of the State Traffic Administration (OSTA) was contacted to identify any ongoing or proposed projects within the study area which may impact the analysis. No projects were identified.

Capacity Analysis

To determine the impacts of the increase of traffic volumes on the operating conditions of the study intersections, the network was analyzed using the Synchro 9 capacity analysis software for the existing, background, and build peak hour conditions. Copies of the analysis reports are provided as a supporting document in this assessment. The increase in heavy vehicles travelling through the corridor was evaluated by adjusting the heavy vehicle percentage for the impacted approaches in the Synchro traffic models.

The results of the Synchro capacity analysis describe the traffic impact in terms of Level of Service (LOS). LOS describes the operational condition of the signalized intersection in terms of delay (in seconds per vehicle) and is expressed on a scale of A through F with LOS A being the best and LOS F being the worst. LOS A reflects intersection operations with little to no vehicle delay (less than 10 seconds per vehicle) and LOS F reflects intersection conditions that are over capacity and experience long delays (more than 80 seconds per vehicle at signalized intersections and more than 50 seconds of delay per vehicle at unsignalized intersections). For unsignalized intersections, only the delay on the STOP-controlled approach is reported.

Results of the analysis indicate that the study area intersections are expected to operate at acceptable levels of service under the build condition. Table 2 below summarizes the results of the analysis for the existing, background, and build conditions for the study area intersections during the AM peak hour.

TABLE 2
PEAK HOUR LEVEL OF SERVICE SUMMARY
AM PEAK HOUR

INTERSECTION	2016 Existing	2017 Background	2017 Build
Route 6 & Long Hill Road	D	D	D
Route 6 & Hebron Road	C	C	C
Route 6 & Site Driveway*	--	--	B

*Unsignalized intersection

The 95th percentile queue length reported at the signalized intersections increases less than one vehicle length when comparing the background and build conditions for all movements. The anticipated increase in traffic associated with the project can be accommodated by the surrounding roadway network.

Conclusion:

The proposed project includes the development of a natural gas infusion facility on the property located at 1010 Route 6 in Andover, Connecticut. The proposed facility will result in an additional twelve (12) vehicle trips (6 entering, 6 exiting) during the peak hour along the proposed truck route. The project site is proposed to be accessed from Route 6 via the existing un-signalized site driveway located near the southern property line, which is being improved as part of the project. The proposed truck route to the site will be along Route 6, to/from the terminus of Interstate 384, approximately 6.7 miles north of the project site in Bolton, Connecticut, as identified in Figure 2, Truck Route Map. All signalized intersections along the proposed truck route and the unsignalized site driveway intersection were analyzed during the dominant peak hour of the surrounding roadway network which was determined to be the AM peak hour.

The traffic impact analysis of the study area intersections indicates that the proposed project will maintain similar operating conditions to those of the background condition of the surrounding roadway network. The site driveway is expected to operate at level of service "B" with minimal delay for vehicles exiting the site. It is the professional opinion of Solli Engineering that the proposed project can be accommodated without adverse impact on the operating conditions of the surrounding roadway network.

Sincerely,
Solli Engineering, LLC

Collene Byrne
Senior Project Engineer

Kevin Solli, P.E.
Principal

Supporting Documents:

Site Location Map	(Figure 1)
Truck Route Map	(Figure 2)
2015 Existing Traffic Volumes	(Figure 3)
Traffic Volume Distribution	(Figure 4)
Traffic Volume Assignment	(Figure 5)
2016 Background Traffic Volumes	(Figure 6)
2016 Build Traffic Volumes	(Figure 7)
Synchro Analysis Reports	

X:\SE Files\Project Data\2016\1603101 - Andover\Office Data\Reports\1508501 Andover Traffic Impact Letter Report.docx

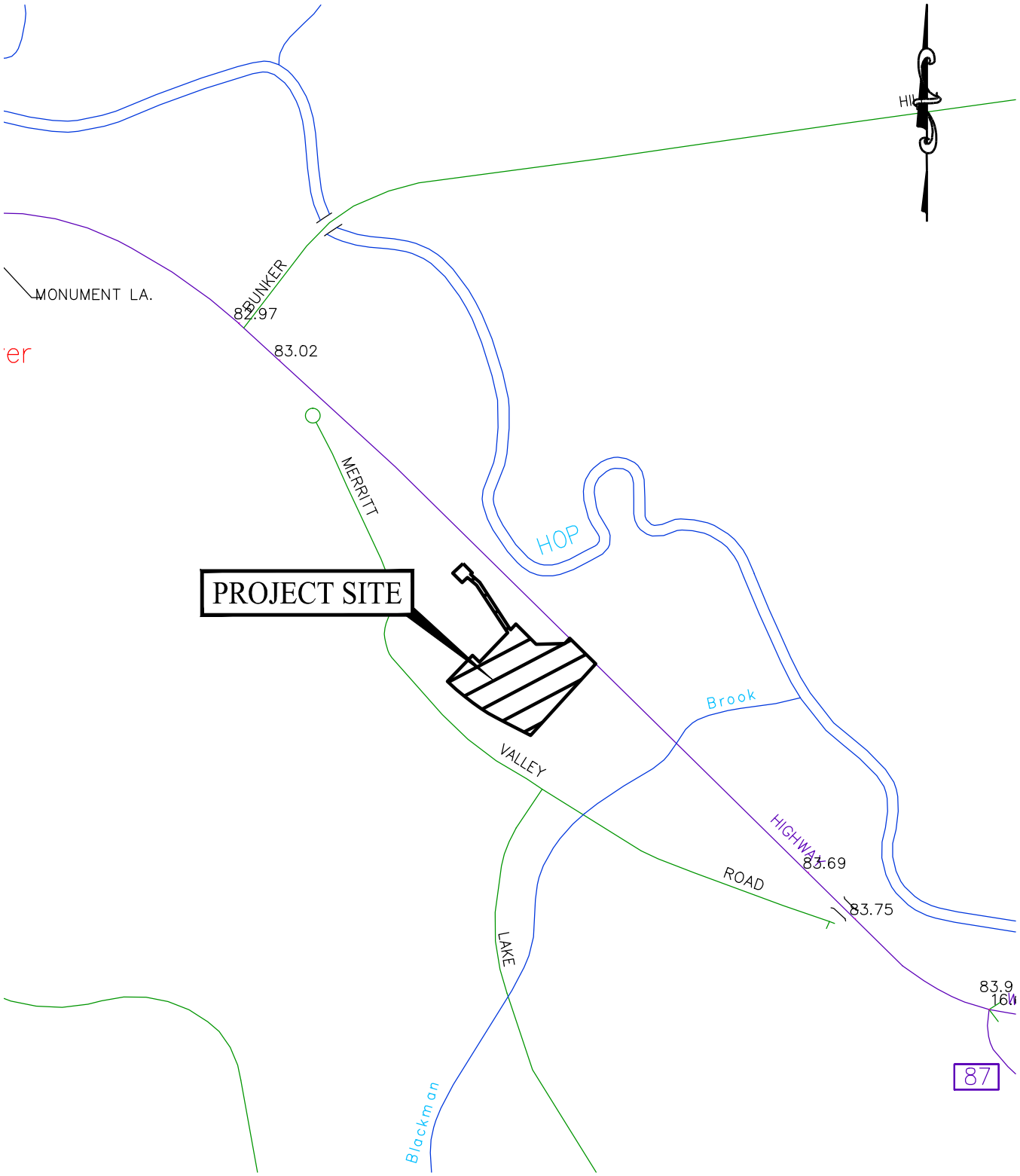

NOTE: BASE MAP INFORMATION TAKEN FROM http://www.ct.gov/dot

700 0 350 700

SOLLI ENGINEERING
501 Main Street, Monroe, CT 06468
T: (203) 880-5455 | F: (203) 880-9695

SITE LOCATION MAP

PENTAGON ENERGY FACILITY
ANDOVER, CONNECTICUT

Project #:	1603101
Plan Date:	04/13/16
Scale:	1"=700'
Figure:	1

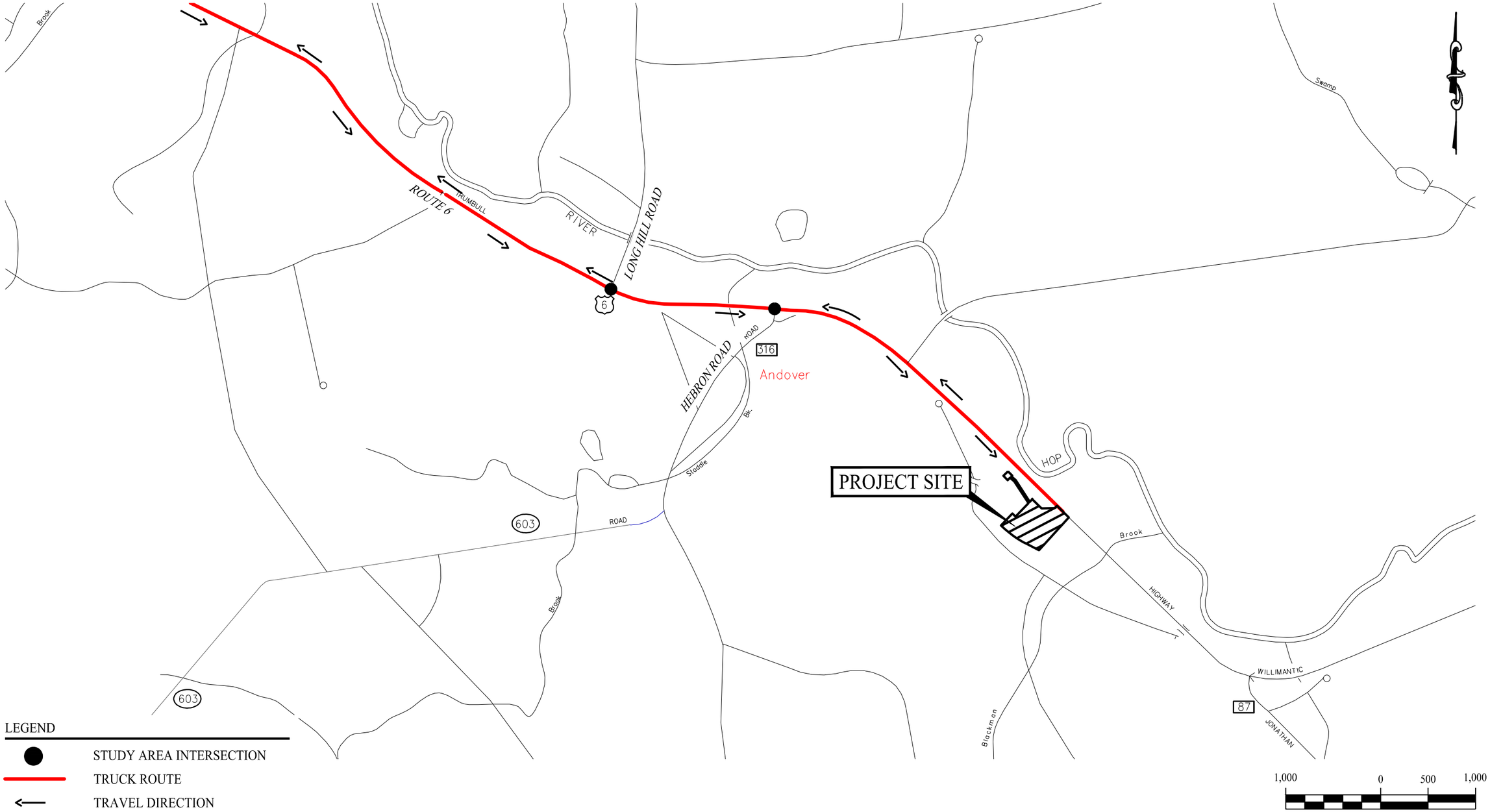

Rev. #:	Date	Description

SOLLI ENGINEERING
1428 Monroe Turnpike, Monroe, CT 06468
T: (203) 880-5455 F: (203) 445-9560

Drawn By:	KLO
Checked By:	KMS
Project #:	1603101
Plan Date:	04/11/16
Scale:	1" = 1,000'

Project:
PENTAGON ENERGY FACILITY
ANDOVER, CONNECTICUT

Sheet Title:
TRUCK ROUTE MAP

SHEET #:
FIG. 2

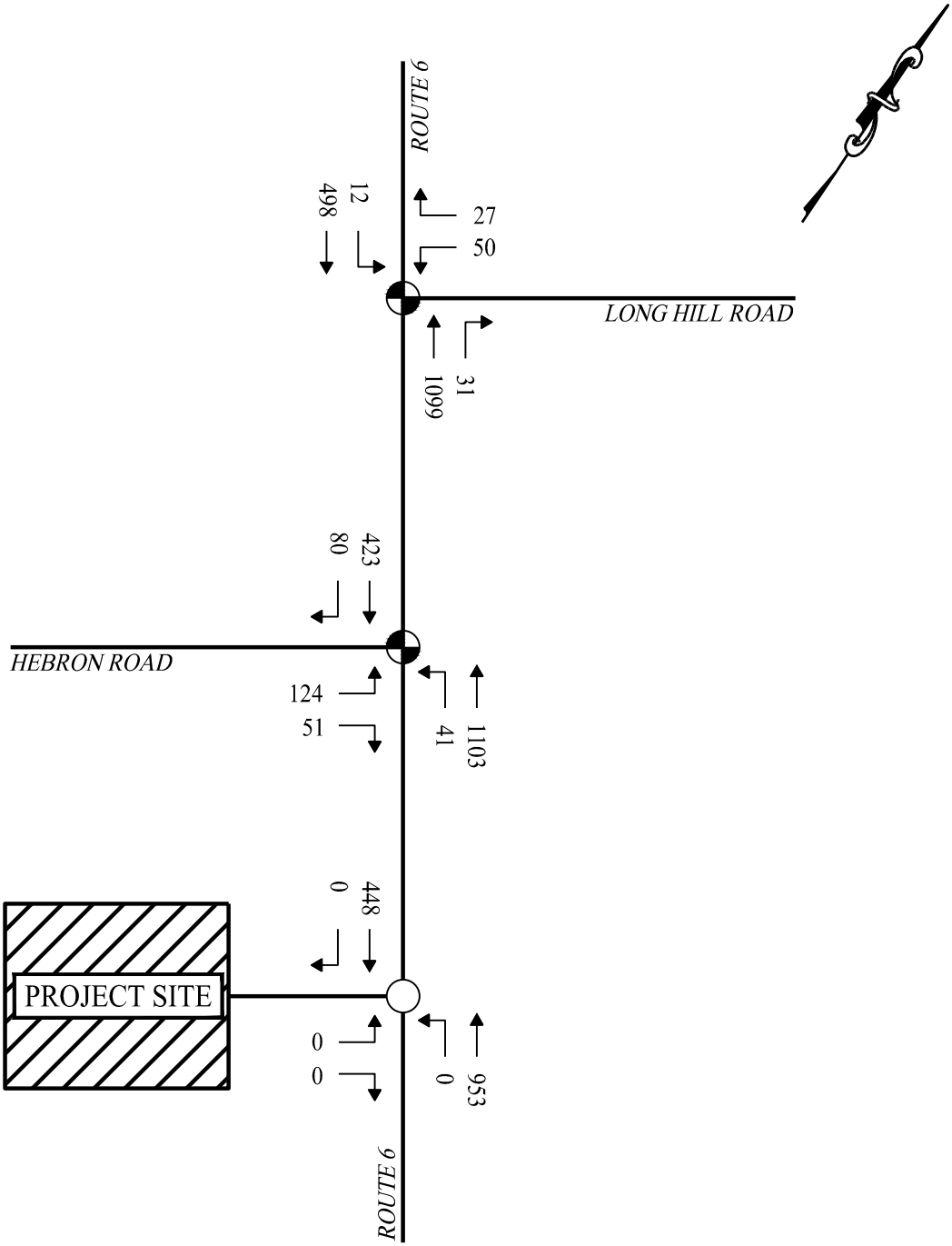

LEGEND

- SIGNALIZED INTERSECTION
- UNSIGNALIZED INTERSECTION
- EXISTING ROADWAY
- AM

SOLLI ENGINEERING
1428 Monroe Tpke, Monroe, CT 06468
T: (203) 880-5455 F: (203) 445-9560

2016 EXISTING TRAFFIC

PENTAGON ENERGY FACILITY
ANDOVER, CONNECTICUT

Project #:	1603101
Plan Date:	04/11/16
Scale:	NTS
Figure:	3

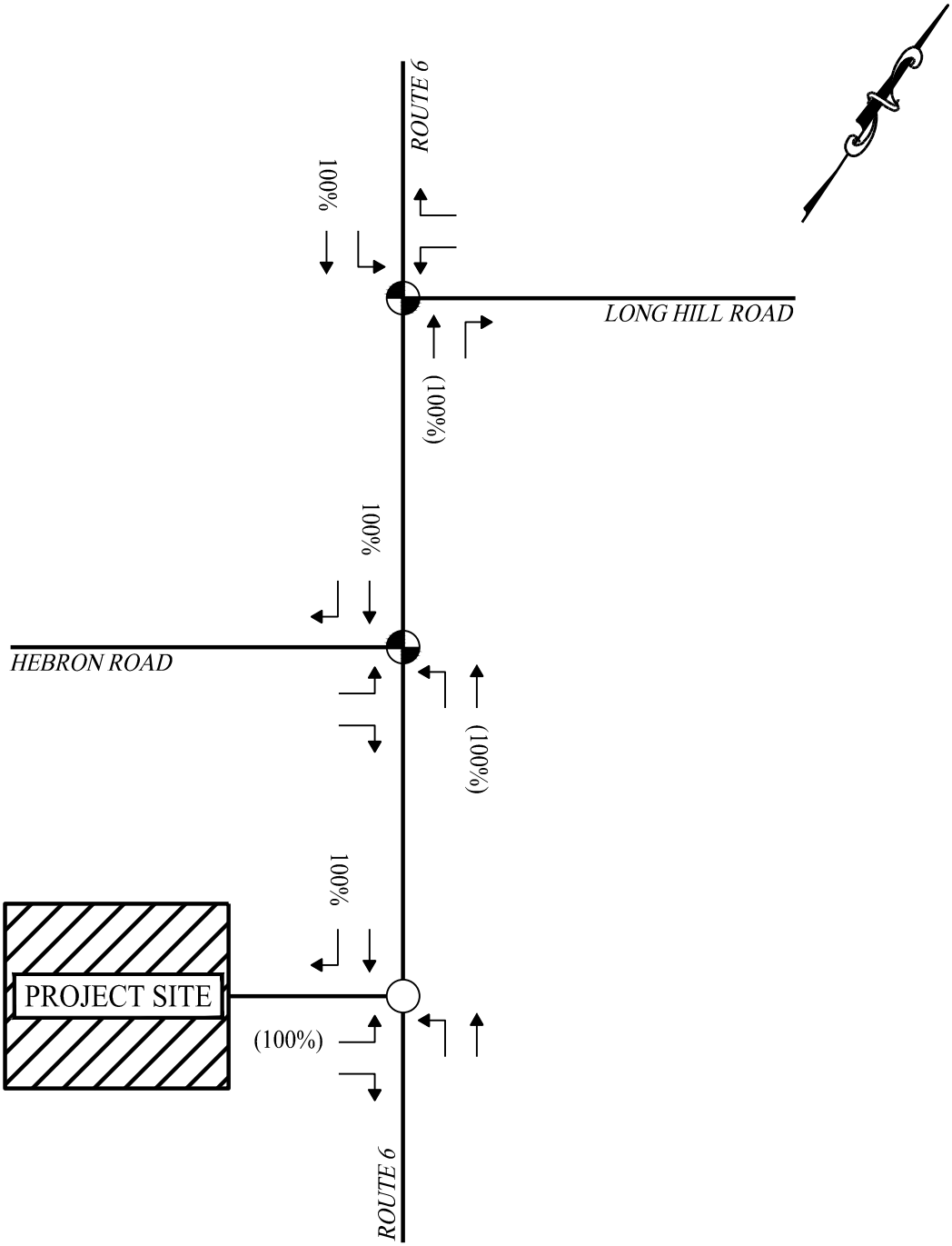

LEGEND

- SIGNALIZED INTERSECTION
- UNSIGNALIZED INTERSECTION
- EXISTING ROADWAY
- ENTER(EXIT)

SOLLI ENGINEERING
1428 Monroe Tpke, Monroe, CT 06468
T: (203) 880-5455 F: (203) 445-9560

TRIP DISTRIBUTION

PENTAGON ENERGY FACILITY
ANDOVER, CONNECTICUT

Project #:	1603101
Plan Date:	04/11/16
Scale:	NTS
Figure:	4

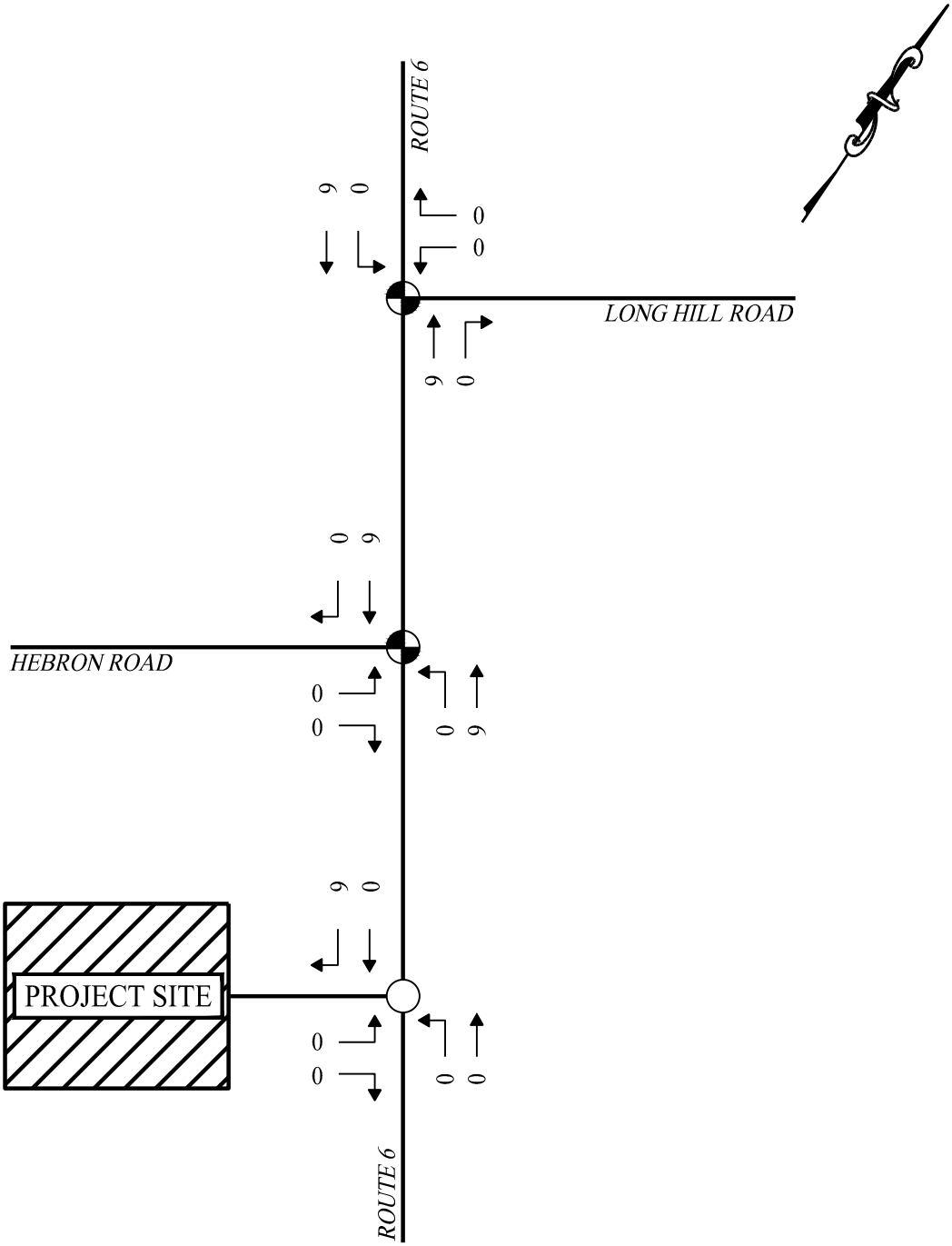

LEGEND

- SIGNALIZED INTERSECTION
- UNSIGNALIZED INTERSECTION
- EXISTING ROADWAY
- AM

SOLLI ENGINEERING
1428 Monroe Tpke, Monroe, CT 06468
T: (203) 880-5455 F: (203) 445-9560

TRIP ASSIGNMENT

PENTAGON ENERGY FACILITY
ANDOVER, CONNECTICUT

Project #:	1603101
Plan Date:	04/11/16
Scale:	NTS
Figure:	5

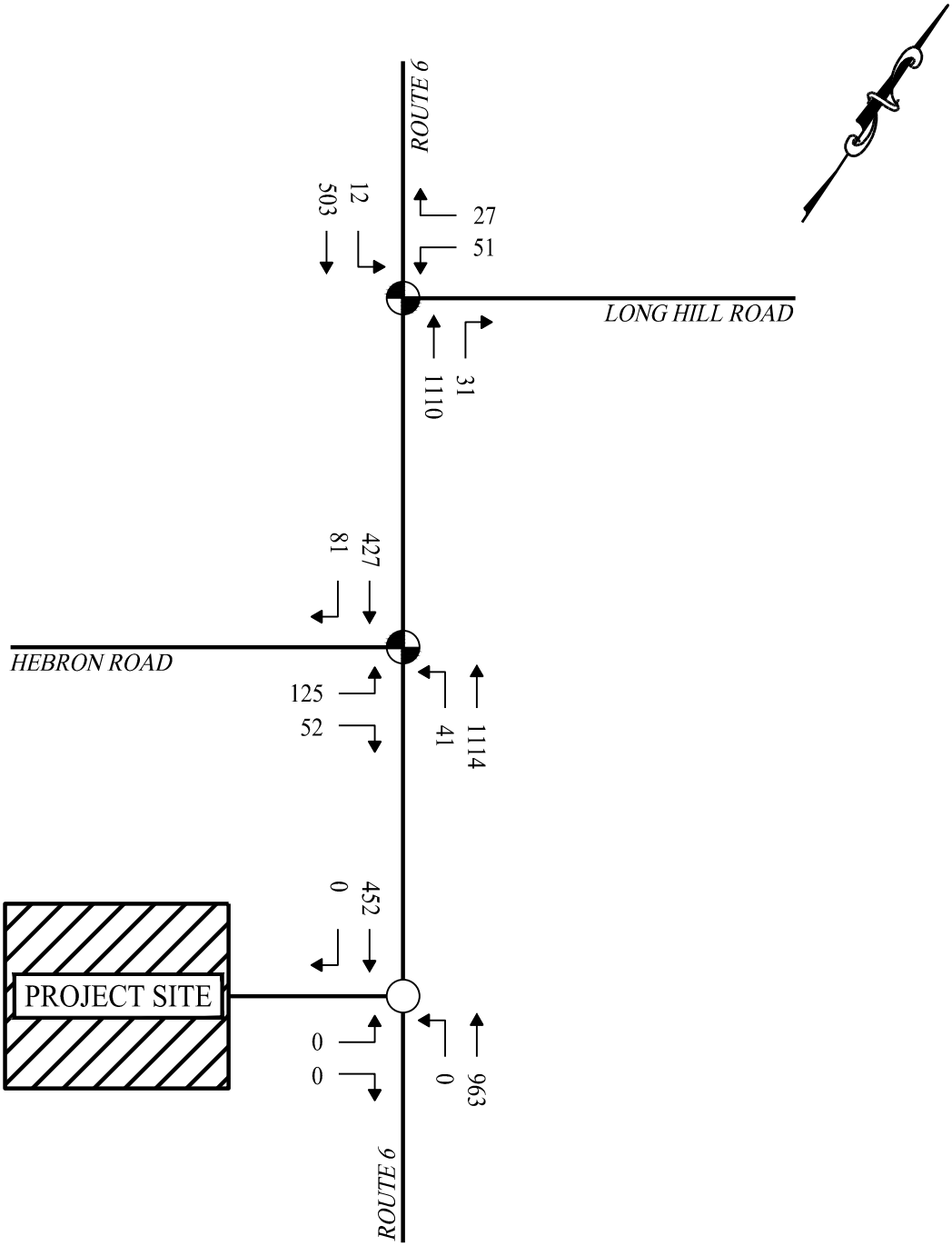

LEGEND

- SIGNALIZED INTERSECTION
- UNSIGNALIZED INTERSECTION
- EXISTING ROADWAY
- AM

SOLLI ENGINEERING
1428 Monroe Tpke, Monroe, CT 06468
T: (203) 880-5455 F: (203) 445-9560

2017 BACKGROUND TRAFFIC

PENTAGON ENERGY FACILITY
ANDOVER, CONNECTICUT

Project #:	1603101
Plan Date:	04/11/16
Scale:	NTS
Figure:	6

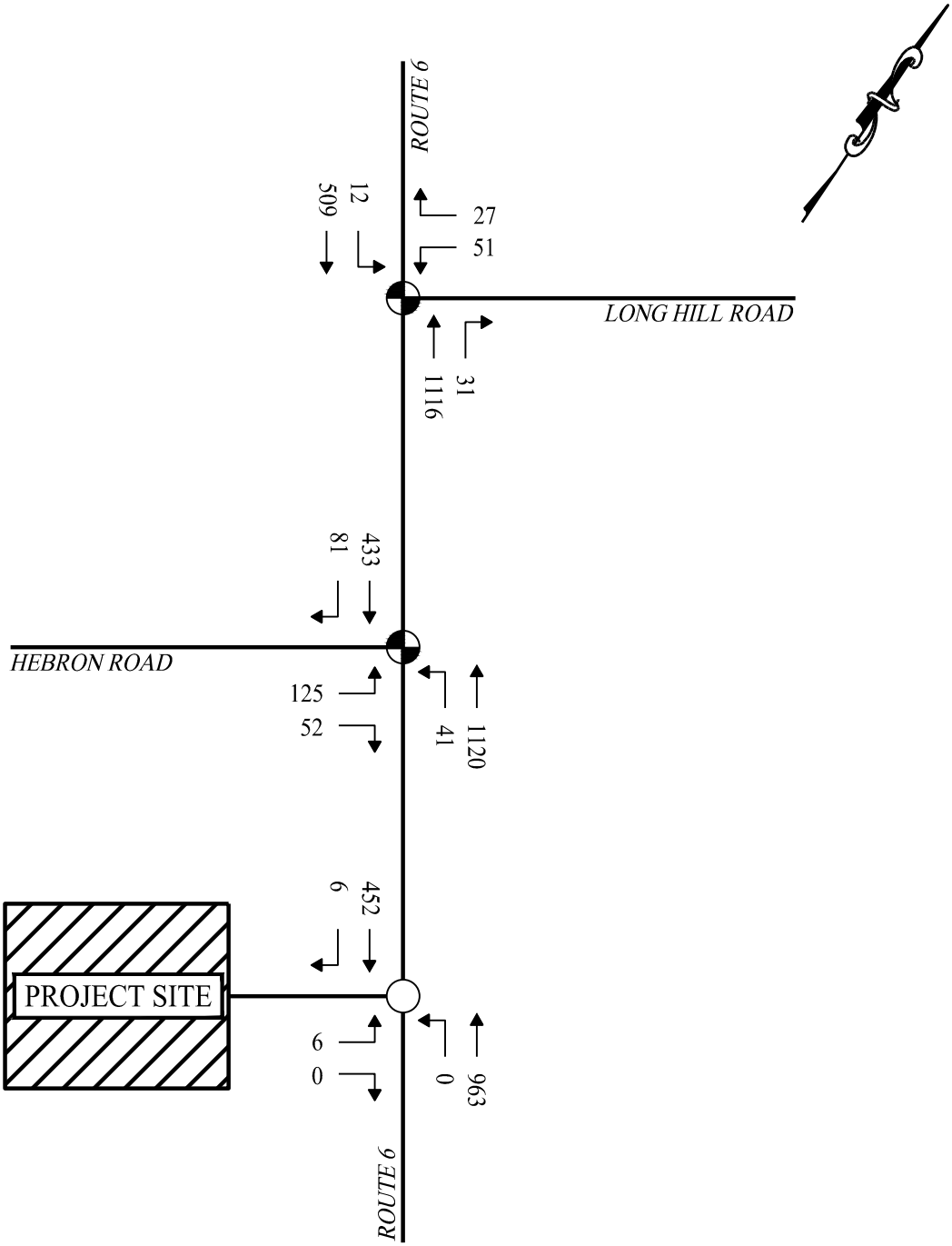

LEGEND

- SIGNALIZED INTERSECTION
- UNSIGNALIZED INTERSECTION
- EXISTING ROADWAY
- AM

SOLLI ENGINEERING
1428 Monroe Tpke, Monroe, CT 06468
T: (203) 880-5455 F: (203) 445-9560

2017 BUILD TRAFFIC

PENTAGON ENERGY FACILITY
ANDOVER, CONNECTICUT

Project #:	1603101
Plan Date:	04/11/16
Scale:	NTS
Figure:	7

Lane Group	EBL	EBT	WBT	WBR	SBL	SBR
Lane Configurations						
Traffic Volume (vph)	12	498	1099	31	50	27
Future Volume (vph)	12	498	1099	31	50	27
Ideal Flow (vphpl)	1900	1900	1900	1900	1900	1900
Lane Width (ft)	11	12	12	12	12	12
Storage Length (ft)	90			0	0	0
Storage Lanes	1			0	1	0
Taper Length (ft)	40				25	
Lane Util. Factor	1.00	1.00	1.00	1.00	1.00	1.00
Frt			0.996		0.952	
Flt Protected	0.950				0.969	
Satd. Flow (prot)	1745	1792	1856	0	1753	0
Flt Permitted	0.097				0.969	
Satd. Flow (perm)	178	1792	1856	0	1753	0
Right Turn on Red				Yes		Yes
Satd. Flow (RTOR)			3		30	
Link Speed (mph)		40	40		30	
Link Distance (ft)		479	1687		327	
Travel Time (s)		8.2	28.8		7.4	
Peak Hour Factor	0.93	0.93	0.86	0.86	0.91	0.91
Heavy Vehicles (%)	0%	6%	2%	0%	0%	0%
Adj. Flow (vph)	13	535	1278	36	55	30
Shared Lane Traffic (%)						
Lane Group Flow (vph)	13	535	1314	0	85	0
Enter Blocked Intersection	No	No	No	No	No	No
Lane Alignment	Left	Left	Left	Right	Left	Right
Median Width(ft)		11	11		12	
Link Offset(ft)		0	0		0	
Crosswalk Width(ft)		16	16		16	
Two way Left Turn Lane						
Headway Factor	1.04	1.00	1.00	1.00	1.00	1.00
Turning Speed (mph)	15			9	15	9
Number of Detectors	3	2	2		3	
Detector Template						
Leading Detector (ft)	32	340	351		26	
Trailing Detector (ft)	-5	178	174		-7	
Detector 1 Position(ft)	-5	178	174		-7	
Detector 1 Size(ft)	6	6	6		6	
Detector 1 Type	Cl+Ex	Cl+Ex	Cl+Ex		Cl+Ex	
Detector 1 Channel						
Detector 1 Extend (s)	0.0	0.0	0.0		0.0	
Detector 1 Queue (s)	0.0	0.0	0.0		0.0	
Detector 1 Delay (s)	0.0	0.0	0.0		0.0	
Detector 2 Position(ft)	10	334	345		10	
Detector 2 Size(ft)	6	6	6		6	
Detector 2 Type	Cl+Ex	Cl+Ex	Cl+Ex		Cl+Ex	
Detector 2 Channel						
Detector 2 Extend (s)	0.0	0.0	0.0		0.0	
Detector 3 Position(ft)	26				20	

Lane Group	EBL	EBT	WBT	WBR	SBL	SBR
Detector 3 Size(ft)	6				6	
Detector 3 Type	Cl+Ex				Cl+Ex	
Detector 3 Channel						
Detector 3 Extend (s)	0.0				0.0	
Turn Type	pm+pt	NA	NA		Prot	
Protected Phases	5	2	6		4	
Permitted Phases	2					
Detector Phase	5	2	6		4	
Switch Phase						
Minimum Initial (s)	5.0	5.0	5.0		5.0	
Minimum Split (s)	9.0	10.6	10.6		9.0	
Total Split (s)	9.5	41.5	32.0		23.6	
Total Split (%)	14.6%	63.7%	49.2%		36.3%	
Maximum Green (s)	5.5	35.9	26.4		19.6	
Yellow Time (s)	3.0	4.4	4.4		3.0	
All-Red Time (s)	1.0	1.2	1.2		1.0	
Lost Time Adjust (s)	0.0	0.0	0.0		0.0	
Total Lost Time (s)	4.0	5.6	5.6		4.0	
Lead/Lag	Lead		Lag			
Lead-Lag Optimize?						
Vehicle Extension (s)	2.0	3.0	3.0		2.0	
Recall Mode	None	Min	None		None	
Act Effct Green (s)	40.8	41.6	39.9		6.5	
Actuated g/C Ratio	0.79	0.81	0.78		0.13	
v/c Ratio	0.04	0.37	0.91		0.34	
Control Delay	2.8	4.0	24.7		18.9	
Queue Delay	0.0	0.0	0.0		0.0	
Total Delay	2.8	4.0	24.7		18.9	
LOS	A	A	C		B	
Approach Delay		4.0	24.7		18.9	
Approach LOS		A	C		B	

Intersection Summary	
Area Type: Other	
Cycle Length: 65.1	
Actuated Cycle Length: 51.4	
Natural Cycle: 90	
Control Type: Actuated-Uncoordinated	
Maximum v/c Ratio: 0.91	
Intersection Signal Delay: 18.6	Intersection LOS: B
Intersection Capacity Utilization 72.1%	ICU Level of Service C
Analysis Period (min) 15	

Splits and Phases: 3: ROUTE 6 & LONG HILL ROAD

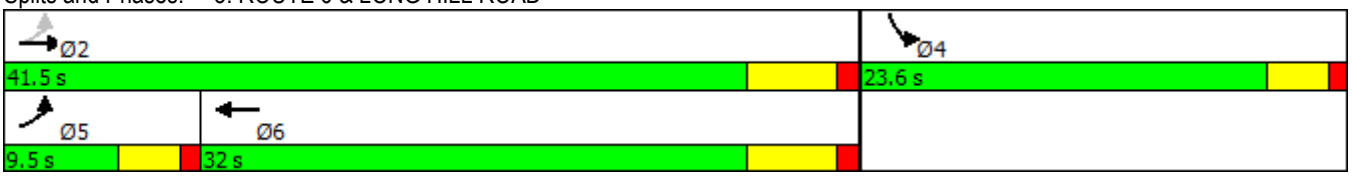

Lane Group	EBL	EBT	WBT	SBL
Lane Group Flow (vph)	13	535	1314	85
v/c Ratio	0.04	0.37	0.91	0.34
Control Delay	2.8	4.0	24.7	18.9
Queue Delay	0.0	0.0	0.0	0.0
Total Delay	2.8	4.0	24.7	18.9
Queue Length 50th (ft)	1	53	313	18
Queue Length 95th (ft)	4	117	#785	47
Internal Link Dist (ft)		399	1607	247
Turn Bay Length (ft)	90			
Base Capacity (vph)	310	1463	1440	691
Starvation Cap Reductn	0	0	0	0
Spillback Cap Reductn	0	0	0	0
Storage Cap Reductn	0	0	0	0
Reduced v/c Ratio	0.04	0.37	0.91	0.12

Intersection Summary

95th percentile volume exceeds capacity, queue may be longer.
Queue shown is maximum after two cycles.

Movement	EBL	EBT	WBT	WBR	SBL	SBR
Lane Configurations						
Traffic Volume (vph)	12	498	1099	31	50	27
Future Volume (vph)	12	498	1099	31	50	27
Ideal Flow (vphpl)	1900	1900	1900	1900	1900	1900
Lane Width	11	12	12	12	12	12
Total Lost time (s)	4.0	5.6	5.6		4.0	
Lane Util. Factor	1.00	1.00	1.00		1.00	
Frt	1.00	1.00	1.00		0.95	
Flt Protected	0.95	1.00	1.00		0.97	
Satd. Flow (prot)	1745	1792	1857		1753	
Flt Permitted	0.10	1.00	1.00		0.97	
Satd. Flow (perm)	177	1792	1857		1753	
Peak-hour factor, PHF	0.93	0.93	0.86	0.86	0.91	0.91
Adj. Flow (vph)	13	535	1278	36	55	30
RTOR Reduction (vph)	0	0	1	0	28	0
Lane Group Flow (vph)	13	535	1313	0	57	0
Heavy Vehicles (%)	0%	6%	2%	0%	0%	0%
Turn Type	pm+pt	NA	NA		Prot	
Protected Phases	5	2	6		4	
Permitted Phases	2					
Actuated Green, G (s)	42.4	42.4	37.4		4.3	
Effective Green, g (s)	42.4	42.4	37.4		4.3	
Actuated g/C Ratio	0.75	0.75	0.66		0.08	
Clearance Time (s)	4.0	5.6	5.6		4.0	
Vehicle Extension (s)	2.0	3.0	3.0		2.0	
Lane Grp Cap (vph)	161	1349	1233		133	
v/s Ratio Prot	0.00	c0.30	c0.71		c0.03	
v/s Ratio Perm	0.06					
v/c Ratio	0.08	0.40	1.06		0.43	
Uniform Delay, d1	14.2	2.4	9.4		24.8	
Progression Factor	1.00	1.00	1.00		1.00	
Incremental Delay, d2	0.1	0.2	44.8		0.8	
Delay (s)	14.3	2.6	54.3		25.6	
Level of Service	B	A	D		C	
Approach Delay (s)		2.9	54.3		25.6	
Approach LOS		A	D		C	

Intersection Summary			
HCM 2000 Control Delay	38.6	HCM 2000 Level of Service	D
HCM 2000 Volume to Capacity ratio	1.00		
Actuated Cycle Length (s)	56.3	Sum of lost time (s)	13.6
Intersection Capacity Utilization	72.1%	ICU Level of Service	C
Analysis Period (min)	15		

c Critical Lane Group

Lane Group	EBT	EBR	WBL	WBT	NBL	NBR
Lane Configurations						
Traffic Volume (vph)	423	80	41	1103	124	51
Future Volume (vph)	423	80	41	1103	124	51
Ideal Flow (vphpl)	1900	1900	1900	1900	1900	1900
Lane Width (ft)	12	11	11	12	11	12
Storage Length (ft)		250	95		0	90
Storage Lanes		1	1		1	1
Taper Length (ft)			40		25	
Lane Util. Factor	1.00	1.00	1.00	1.00	1.00	1.00
Frt		0.850				0.850
Flt Protected			0.950		0.950	
Satd. Flow (prot)	1776	1546	1745	1845	1728	1615
Flt Permitted			0.389		0.950	
Satd. Flow (perm)	1776	1546	714	1845	1728	1615
Right Turn on Red		Yes				Yes
Satd. Flow (RTOR)		95				63
Link Speed (mph)	40			40	35	
Link Distance (ft)	1687			3890	285	
Travel Time (s)	28.8			66.3	5.6	
Peak Hour Factor	0.84	0.84	0.89	0.89	0.81	0.81
Heavy Vehicles (%)	7%	1%	0%	3%	1%	0%
Adj. Flow (vph)	504	95	46	1239	153	63
Shared Lane Traffic (%)						
Lane Group Flow (vph)	504	95	46	1239	153	63
Enter Blocked Intersection	No	No	No	No	No	No
Lane Alignment	Left	Right	Left	Left	Left	Right
Median Width(ft)	11			11	11	
Link Offset(ft)	0			0	0	
Crosswalk Width(ft)	16			16	16	
Two way Left Turn Lane						
Headway Factor	1.00	1.04	1.04	1.00	1.04	1.00
Turning Speed (mph)		9	15		15	9
Number of Detectors	2	1	3	2	3	3
Detector Template						
Leading Detector (ft)	366	186	29	406	27	17
Trailing Detector (ft)	180	180	-4	200	-10	-10
Detector 1 Position(ft)	180	180	-4	200	-10	-10
Detector 1 Size(ft)	6	6	6	6	6	6
Detector 1 Type	Cl+Ex	Cl+Ex	Cl+Ex	Cl+Ex	Cl+Ex	Cl+Ex
Detector 1 Channel						
Detector 1 Extend (s)	0.0	0.0	0.0	0.0	0.0	0.0
Detector 1 Queue (s)	0.0	0.0	0.0	0.0	0.0	0.0
Detector 1 Delay (s)	0.0	0.0	0.0	0.0	0.0	0.0
Detector 2 Position(ft)	360		13	400	5	0
Detector 2 Size(ft)	6		6	6	6	6
Detector 2 Type	Cl+Ex		Cl+Ex	Cl+Ex	Cl+Ex	Cl+Ex
Detector 2 Channel						
Detector 2 Extend (s)	0.0		0.0	0.0	0.0	0.0
Detector 3 Position(ft)			23		21	11

Lane Group	EBT	EBR	WBL	WBT	NBL	NBR
Detector 3 Size(ft)			6		6	6
Detector 3 Type			Cl+Ex		Cl+Ex	Cl+Ex
Detector 3 Channel						
Detector 3 Extend (s)			0.0		0.0	0.0
Turn Type	NA	Prot	pm+pt	NA	Prot	Prot
Protected Phases	2	2	1	6	8	8
Permitted Phases			6			
Detector Phase	2	2	1	6	8	8
Switch Phase						
Minimum Initial (s)	15.0	15.0	5.0	15.0	6.0	6.0
Minimum Split (s)	22.0	22.0	9.0	22.0	10.7	10.7
Total Split (s)	40.0	40.0	12.0	52.0	24.7	24.7
Total Split (%)	52.2%	52.2%	15.6%	67.8%	32.2%	32.2%
Maximum Green (s)	33.0	33.0	8.0	45.0	20.0	20.0
Yellow Time (s)	4.4	4.4	3.0	4.4	3.7	3.7
All-Red Time (s)	2.6	2.6	1.0	2.6	1.0	1.0
Lost Time Adjust (s)	0.0	0.0	0.0	0.0	0.0	0.0
Total Lost Time (s)	7.0	7.0	4.0	7.0	4.7	4.7
Lead/Lag	Lag	Lag	Lead			
Lead-Lag Optimize?						
Vehicle Extension (s)	3.0	3.0	2.0	3.0	2.0	2.0
Recall Mode	Min	Min	None	None	None	None
Act Effct Green (s)	42.1	42.1	50.9	47.9	10.7	10.7
Actuated g/C Ratio	0.60	0.60	0.72	0.68	0.15	0.15
v/c Ratio	0.47	0.10	0.08	0.99	0.58	0.21
Control Delay	11.8	2.7	3.8	37.1	35.9	9.0
Queue Delay	0.0	0.0	0.0	0.0	0.0	0.0
Total Delay	11.8	2.7	3.8	37.1	35.9	9.0
LOS	B	A	A	D	D	A
Approach Delay	10.3			35.9	28.1	
Approach LOS	B			D	C	

Intersection Summary	
Area Type: Other	
Cycle Length: 76.7	
Actuated Cycle Length: 70.3	
Natural Cycle: 90	
Control Type: Actuated-Uncoordinated	
Maximum v/c Ratio: 0.99	
Intersection Signal Delay: 27.8	Intersection LOS: C
Intersection Capacity Utilization 74.7%	ICU Level of Service D
Analysis Period (min) 15	

Splits and Phases: 6: HEBRON ROAD & ROUTE 6

Lane Group	EBT	EBR	WBL	WBT	NBL	NBR
Lane Group Flow (vph)	504	95	46	1239	153	63
v/c Ratio	0.47	0.10	0.08	0.99	0.58	0.21
Control Delay	11.8	2.7	3.8	37.1	35.9	9.0
Queue Delay	0.0	0.0	0.0	0.0	0.0	0.0
Total Delay	11.8	2.7	3.8	37.1	35.9	9.0
Queue Length 50th (ft)	123	0	4	~425	59	0
Queue Length 95th (ft)	217	18	15	#841	99	23
Internal Link Dist (ft)	1607			3810	205	
Turn Bay Length (ft)		250	95			90
Base Capacity (vph)	1062	963	634	1256	493	506
Starvation Cap Reductn	0	0	0	0	0	0
Spillback Cap Reductn	0	0	0	0	0	0
Storage Cap Reductn	0	0	0	0	0	0
Reduced v/c Ratio	0.47	0.10	0.07	0.99	0.31	0.12

Intersection Summary

~ Volume exceeds capacity, queue is theoretically infinite.
Queue shown is maximum after two cycles.

95th percentile volume exceeds capacity, queue may be longer.
Queue shown is maximum after two cycles.

Movement	EBT	EBR	WBL	WBT	NBL	NBR
Lane Configurations						
Traffic Volume (vph)	423	80	41	1103	124	51
Future Volume (vph)	423	80	41	1103	124	51
Ideal Flow (vphpl)	1900	1900	1900	1900	1900	1900
Lane Width	12	11	11	12	11	12
Total Lost time (s)	7.0	7.0	4.0	7.0	4.7	4.7
Lane Util. Factor	1.00	1.00	1.00	1.00	1.00	1.00
Frt	1.00	0.85	1.00	1.00	1.00	0.85
Flt Protected	1.00	1.00	0.95	1.00	0.95	1.00
Satd. Flow (prot)	1776	1546	1745	1845	1728	1615
Flt Permitted	1.00	1.00	0.39	1.00	0.95	1.00
Satd. Flow (perm)	1776	1546	715	1845	1728	1615
Peak-hour factor, PHF	0.84	0.84	0.89	0.89	0.81	0.81
Adj. Flow (vph)	504	95	46	1239	153	63
RTOR Reduction (vph)	0	39	0	0	0	54
Lane Group Flow (vph)	504	56	46	1239	153	9
Heavy Vehicles (%)	7%	1%	0%	3%	1%	0%
Turn Type	NA	Prot	pm+pt	NA	Prot	Prot
Protected Phases	2	2	1	6	8	8
Permitted Phases			6			
Actuated Green, G (s)	42.1	42.1	49.5	49.5	10.7	10.7
Effective Green, g (s)	42.1	42.1	49.5	49.5	10.7	10.7
Actuated g/C Ratio	0.59	0.59	0.69	0.69	0.15	0.15
Clearance Time (s)	7.0	7.0	4.0	7.0	4.7	4.7
Vehicle Extension (s)	3.0	3.0	2.0	3.0	2.0	2.0
Lane Grp Cap (vph)	1039	905	540	1270	257	240
v/s Ratio Prot	0.28	0.04	0.00	c0.67	c0.09	0.01
v/s Ratio Perm			0.05			
v/c Ratio	0.49	0.06	0.09	0.98	0.60	0.04
Uniform Delay, d1	8.6	6.4	4.1	10.6	28.6	26.2
Progression Factor	1.00	1.00	1.00	1.00	1.00	1.00
Incremental Delay, d2	0.4	0.0	0.0	19.5	2.5	0.0
Delay (s)	9.0	6.4	4.1	30.1	31.0	26.2
Level of Service	A	A	A	C	C	C
Approach Delay (s)	8.6			29.2	29.6	
Approach LOS	A			C	C	

Intersection Summary			
HCM 2000 Control Delay	23.3	HCM 2000 Level of Service	C
HCM 2000 Volume to Capacity ratio	0.97		
Actuated Cycle Length (s)	71.9	Sum of lost time (s)	15.7
Intersection Capacity Utilization	74.7%	ICU Level of Service	D
Analysis Period (min)	15		

c Critical Lane Group

Lane Group	SET	SER	NWL	NWT	NEL	NER
Lane Configurations						
Traffic Volume (vph)	448	0	0	953	0	0
Future Volume (vph)	448	0	0	953	0	0
Ideal Flow (vphpl)	1900	1900	1900	1900	1900	1900
Lane Util. Factor	1.00	1.00	1.00	1.00	1.00	1.00
Frt						
Flt Protected						
Satd. Flow (prot)	1900	0	0	1900	1900	0
Flt Permitted						
Satd. Flow (perm)	1900	0	0	1900	1900	0
Link Speed (mph)	40			40	20	
Link Distance (ft)	3890			559	244	
Travel Time (s)	66.3			9.5	8.3	
Peak Hour Factor	0.90	0.90	0.91	0.91	0.92	0.92
Adj. Flow (vph)	498	0	0	1047	0	0
Shared Lane Traffic (%)						
Lane Group Flow (vph)	498	0	0	1047	0	0
Enter Blocked Intersection	No	No	No	No	No	No
Lane Alignment	Left	Right	Left	Left	Left	Right
Median Width(ft)	11			11	12	
Link Offset(ft)	0			0	0	
Crosswalk Width(ft)	16			16	16	
Two way Left Turn Lane						
Headway Factor	1.00	1.00	1.00	1.00	1.00	1.00
Turning Speed (mph)		9	15		15	9
Sign Control	Free			Free	Stop	

Intersection Summary	
Area Type:	Other
Control Type: Unsignalized	
Intersection Capacity Utilization 53.5%	ICU Level of Service A
Analysis Period (min) 15	

Movement	SET	SER	NWL	NWT	NEL	NER
Lane Configurations						
Traffic Volume (veh/h)	448	0	0	953	0	0
Future Volume (Veh/h)	448	0	0	953	0	0
Sign Control	Free			Free	Stop	
Grade	0%			0%	0%	
Peak Hour Factor	0.90	0.90	0.91	0.91	0.92	0.92
Hourly flow rate (vph)	498	0	0	1047	0	0
Pedestrians						
Lane Width (ft)						
Walking Speed (ft/s)						
Percent Blockage						
Right turn flare (veh)						
Median type	None			None		
Median storage veh)						
Upstream signal (ft)						
pX, platoon unblocked						
vC, conflicting volume			498		1545	498
vC1, stage 1 conf vol						
vC2, stage 2 conf vol						
vCu, unblocked vol			498		1545	498
tC, single (s)			4.1		6.4	6.2
tC, 2 stage (s)						
tF (s)			2.2		3.5	3.3
p0 queue free %			100		100	100
cM capacity (veh/h)			1076		127	576

Direction, Lane #	SE 1	NW 1	NE 1
Volume Total	498	1047	0
Volume Left	0	0	0
Volume Right	0	0	0
cSH	1700	1076	1700
Volume to Capacity	0.29	0.00	0.00
Queue Length 95th (ft)	0	0	0
Control Delay (s)	0.0	0.0	0.0
Lane LOS			A
Approach Delay (s)	0.0	0.0	0.0
Approach LOS			A

Intersection Summary			
Average Delay	0.0		
Intersection Capacity Utilization	53.5%	ICU Level of Service	A
Analysis Period (min)	15		

Lane Group	EBL	EBT	WBT	WBR	SBL	SBR
Lane Configurations						
Traffic Volume (vph)	12	503	1110	31	51	27
Future Volume (vph)	12	503	1110	31	51	27
Ideal Flow (vphpl)	1900	1900	1900	1900	1900	1900
Lane Width (ft)	11	12	12	12	12	12
Storage Length (ft)	90			0	0	0
Storage Lanes	1			0	1	0
Taper Length (ft)	40				25	
Lane Util. Factor	1.00	1.00	1.00	1.00	1.00	1.00
Frt			0.996		0.953	
Flt Protected	0.950				0.968	
Satd. Flow (prot)	1745	1792	1856	0	1753	0
Flt Permitted	0.097				0.968	
Satd. Flow (perm)	178	1792	1856	0	1753	0
Right Turn on Red				Yes		Yes
Satd. Flow (RTOR)			3		30	
Link Speed (mph)		40	40		30	
Link Distance (ft)		479	1687		327	
Travel Time (s)		8.2	28.8		7.4	
Peak Hour Factor	0.93	0.93	0.86	0.86	0.91	0.91
Heavy Vehicles (%)	0%	6%	2%	0%	0%	0%
Adj. Flow (vph)	13	541	1291	36	56	30
Shared Lane Traffic (%)						
Lane Group Flow (vph)	13	541	1327	0	86	0
Enter Blocked Intersection	No	No	No	No	No	No
Lane Alignment	Left	Left	Left	Right	Left	Right
Median Width(ft)		11	11		12	
Link Offset(ft)		0	0		0	
Crosswalk Width(ft)		16	16		16	
Two way Left Turn Lane						
Headway Factor	1.04	1.00	1.00	1.00	1.00	1.00
Turning Speed (mph)	15			9	15	9
Number of Detectors	1	3	3		1	
Detector Template	Left	Thru	Thru		Left	
Leading Detector (ft)	32	340	351		26	
Trailing Detector (ft)	-5	178	174		-7	
Detector 1 Position(ft)	-5	178	174		-7	
Detector 1 Size(ft)	37	6	6		33	
Detector 1 Type	Cl+Ex	Cl+Ex	Cl+Ex		Cl+Ex	
Detector 1 Channel						
Detector 1 Extend (s)	0.0	0.0	0.0		0.0	
Detector 1 Queue (s)	0.0	0.0	0.0		0.0	
Detector 1 Delay (s)	0.0	0.0	0.0		0.0	
Detector 2 Position(ft)		256	259			
Detector 2 Size(ft)		6	6			
Detector 2 Type		Cl+Ex	Cl+Ex			
Detector 2 Channel						
Detector 2 Extend (s)		0.0	0.0			
Detector 3 Position(ft)		334	345			

Lane Group	EBL	EBT	WBT	WBR	SBL	SBR
Detector 3 Size(ft)		6	6			
Detector 3 Type		Cl+Ex	Cl+Ex			
Detector 3 Channel						
Detector 3 Extend (s)		0.0	0.0			
Turn Type	pm+pt	NA	NA		Prot	
Protected Phases	5	2	6		4	
Permitted Phases	2					
Detector Phase	5	2	6		4	
Switch Phase						
Minimum Initial (s)	5.0	5.0	5.0		5.0	
Minimum Split (s)	9.0	10.6	10.6		9.0	
Total Split (s)	9.5	41.5	32.0		23.6	
Total Split (%)	14.6%	63.7%	49.2%		36.3%	
Maximum Green (s)	5.5	35.9	26.4		19.6	
Yellow Time (s)	3.0	4.4	4.4		3.0	
All-Red Time (s)	1.0	1.2	1.2		1.0	
Lost Time Adjust (s)	0.0	0.0	0.0		0.0	
Total Lost Time (s)	4.0	5.6	5.6		4.0	
Lead/Lag	Lead		Lag			
Lead-Lag Optimize?						
Vehicle Extension (s)	2.0	3.0	3.0		2.0	
Recall Mode	None	Min	None		None	
Act Effct Green (s)	40.8	41.6	39.8		6.5	
Actuated g/C Ratio	0.79	0.81	0.77		0.13	
v/c Ratio	0.04	0.37	0.92		0.35	
Control Delay	2.8	4.1	25.8		18.9	
Queue Delay	0.0	0.0	0.0		0.0	
Total Delay	2.8	4.1	25.8		18.9	
LOS	A	A	C		B	
Approach Delay		4.0	25.8		18.9	
Approach LOS		A	C		B	

Intersection Summary	
Area Type: Other	
Cycle Length: 65.1	
Actuated Cycle Length: 51.4	
Natural Cycle: 90	
Control Type: Actuated-Uncoordinated	
Maximum v/c Ratio: 0.92	
Intersection Signal Delay: 19.4	Intersection LOS: B
Intersection Capacity Utilization 72.8%	ICU Level of Service C
Analysis Period (min) 15	

Splits and Phases: 3: ROUTE 6 & LONG HILL ROAD

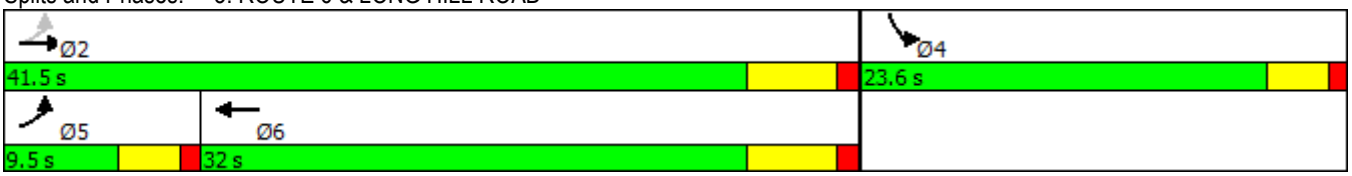

Lane Group	EBL	EBT	WBT	SBL
Lane Group Flow (vph)	13	541	1327	86
v/c Ratio	0.04	0.37	0.92	0.35
Control Delay	2.8	4.1	25.8	18.9
Queue Delay	0.0	0.0	0.0	0.0
Total Delay	2.8	4.1	25.8	18.9
Queue Length 50th (ft)	1	54	323	18
Queue Length 95th (ft)	4	117	#794	48
Internal Link Dist (ft)		399	1607	247
Turn Bay Length (ft)	90			
Base Capacity (vph)	310	1463	1439	691
Starvation Cap Reductn	0	0	0	0
Spillback Cap Reductn	0	0	0	0
Storage Cap Reductn	0	0	0	0
Reduced v/c Ratio	0.04	0.37	0.92	0.12

Intersection Summary

95th percentile volume exceeds capacity, queue may be longer.
Queue shown is maximum after two cycles.

Movement	EBL	EBT	WBT	WBR	SBL	SBR
Lane Configurations						
Traffic Volume (vph)	12	503	1110	31	51	27
Future Volume (vph)	12	503	1110	31	51	27
Ideal Flow (vphpl)	1900	1900	1900	1900	1900	1900
Lane Width	11	12	12	12	12	12
Total Lost time (s)	4.0	5.6	5.6		4.0	
Lane Util. Factor	1.00	1.00	1.00		1.00	
Frt	1.00	1.00	1.00		0.95	
Flt Protected	0.95	1.00	1.00		0.97	
Satd. Flow (prot)	1745	1792	1857		1753	
Flt Permitted	0.10	1.00	1.00		0.97	
Satd. Flow (perm)	177	1792	1857		1753	
Peak-hour factor, PHF	0.93	0.93	0.86	0.86	0.91	0.91
Adj. Flow (vph)	13	541	1291	36	56	30
RTOR Reduction (vph)	0	0	1	0	28	0
Lane Group Flow (vph)	13	541	1326	0	58	0
Heavy Vehicles (%)	0%	6%	2%	0%	0%	0%
Turn Type	pm+pt	NA	NA		Prot	
Protected Phases	5	2	6		4	
Permitted Phases	2					
Actuated Green, G (s)	42.4	42.4	37.4		4.3	
Effective Green, g (s)	42.4	42.4	37.4		4.3	
Actuated g/C Ratio	0.75	0.75	0.66		0.08	
Clearance Time (s)	4.0	5.6	5.6		4.0	
Vehicle Extension (s)	2.0	3.0	3.0		2.0	
Lane Grp Cap (vph)	161	1349	1233		133	
v/s Ratio Prot	0.00	c0.30	c0.71		c0.03	
v/s Ratio Perm	0.06					
v/c Ratio	0.08	0.40	1.08		0.44	
Uniform Delay, d1	14.2	2.5	9.4		24.8	
Progression Factor	1.00	1.00	1.00		1.00	
Incremental Delay, d2	0.1	0.2	48.5		0.8	
Delay (s)	14.3	2.7	58.0		25.7	
Level of Service	B	A	E		C	
Approach Delay (s)		2.9	58.0		25.7	
Approach LOS		A	E		C	

Intersection Summary			
HCM 2000 Control Delay	41.0	HCM 2000 Level of Service	D
HCM 2000 Volume to Capacity ratio	1.01		
Actuated Cycle Length (s)	56.3	Sum of lost time (s)	13.6
Intersection Capacity Utilization	72.8%	ICU Level of Service	C
Analysis Period (min)	15		

c Critical Lane Group

Lane Group	EBT	EBR	WBL	WBT	NBL	NBR
Lane Configurations						
Traffic Volume (vph)	427	81	41	1114	125	52
Future Volume (vph)	427	81	41	1114	125	52
Ideal Flow (vphpl)	1900	1900	1900	1900	1900	1900
Lane Width (ft)	12	11	11	12	11	12
Storage Length (ft)		250	95		0	90
Storage Lanes		1	1		1	1
Taper Length (ft)			40		25	
Lane Util. Factor	1.00	1.00	1.00	1.00	1.00	1.00
Frt		0.850				0.850
Flt Protected			0.950		0.950	
Satd. Flow (prot)	1776	1546	1745	1845	1728	1615
Flt Permitted			0.387		0.950	
Satd. Flow (perm)	1776	1546	711	1845	1728	1615
Right Turn on Red		Yes				Yes
Satd. Flow (RTOR)		96				64
Link Speed (mph)	40			40	35	
Link Distance (ft)	1687			3890	285	
Travel Time (s)	28.8			66.3	5.6	
Peak Hour Factor	0.84	0.84	0.89	0.89	0.81	0.81
Heavy Vehicles (%)	7%	1%	0%	3%	1%	0%
Adj. Flow (vph)	508	96	46	1252	154	64
Shared Lane Traffic (%)						
Lane Group Flow (vph)	508	96	46	1252	154	64
Enter Blocked Intersection	No	No	No	No	No	No
Lane Alignment	Left	Right	Left	Left	Left	Right
Median Width(ft)	11			11	11	
Link Offset(ft)	0			0	0	
Crosswalk Width(ft)	16			16	16	
Two way Left Turn Lane						
Headway Factor	1.00	1.04	1.04	1.00	1.04	1.00
Turning Speed (mph)		9	15		15	9
Number of Detectors	4	1	1	3	1	1
Detector Template	Thru	Right	Left	Thru	Left	Right
Leading Detector (ft)	366	186	29	406	27	17
Trailing Detector (ft)	0	180	-4	200	-10	-10
Detector 1 Position(ft)	0	180	-4	200	-10	-10
Detector 1 Size(ft)	6	6	33	6	37	27
Detector 1 Type	Cl+Ex	Cl+Ex	Cl+Ex	Cl+Ex	Cl+Ex	Cl+Ex
Detector 1 Channel						
Detector 1 Extend (s)	0.0	0.0	0.0	0.0	0.0	0.0
Detector 1 Queue (s)	0.0	0.0	0.0	0.0	0.0	0.0
Detector 1 Delay (s)	0.0	0.0	0.0	0.0	0.0	0.0
Detector 2 Position(ft)	120			300		
Detector 2 Size(ft)	6			6		
Detector 2 Type	Cl+Ex			Cl+Ex		
Detector 2 Channel						
Detector 2 Extend (s)	0.0			0.0		
Detector 3 Position(ft)	240			400		

Lane Group	EBT	EBR	WBL	WBT	NBL	NBR
Detector 3 Size(ft)	6			6		
Detector 3 Type	Cl+Ex			Cl+Ex		
Detector 3 Channel						
Detector 3 Extend (s)	0.0			0.0		
Detector 4 Position(ft)	360					
Detector 4 Size(ft)	6					
Detector 4 Type	Cl+Ex					
Detector 4 Channel						
Detector 4 Extend (s)	0.0					
Turn Type	NA	Prot	pm+pt	NA	Prot	custom
Protected Phases	2	2	1	6	8	8
Permitted Phases			6			2
Detector Phase	2	2	1	6	8	8
Switch Phase						
Minimum Initial (s)	15.0	15.0	5.0	15.0	6.0	6.0
Minimum Split (s)	22.0	22.0	9.0	22.0	10.7	10.7
Total Split (s)	40.0	40.0	12.0	52.0	24.7	24.7
Total Split (%)	52.2%	52.2%	15.6%	67.8%	32.2%	32.2%
Maximum Green (s)	33.0	33.0	8.0	45.0	20.0	20.0
Yellow Time (s)	4.4	4.4	3.0	4.4	3.7	3.7
All-Red Time (s)	2.6	2.6	1.0	2.6	1.0	1.0
Lost Time Adjust (s)	0.0	0.0	0.0	0.0	0.0	0.0
Total Lost Time (s)	7.0	7.0	4.0	7.0	4.7	4.7
Lead/Lag	Lag	Lag	Lead			
Lead-Lag Optimize?						
Vehicle Extension (s)	3.0	3.0	2.0	3.0	2.0	2.0
Recall Mode	Min	Min	None	None	None	None
Act Effct Green (s)	42.1	42.1	50.9	47.9	10.7	61.7
Actuated g/C Ratio	0.60	0.60	0.72	0.68	0.15	0.88
v/c Ratio	0.48	0.10	0.08	1.00	0.59	0.04
Control Delay	11.9	2.7	3.8	39.8	35.9	0.5
Queue Delay	0.0	0.0	0.0	0.0	0.0	0.0
Total Delay	11.9	2.7	3.8	39.8	35.9	0.5
LOS	B	A	A	D	D	A
Approach Delay	10.4			38.5	25.5	
Approach LOS	B			D	C	

Intersection Summary	
Area Type: Other	
Cycle Length: 76.7	
Actuated Cycle Length: 70.4	
Natural Cycle: 90	
Control Type: Actuated-Uncoordinated	
Maximum v/c Ratio: 1.00	
Intersection Signal Delay: 29.2	Intersection LOS: C
Intersection Capacity Utilization 75.3%	ICU Level of Service D
Analysis Period (min) 15	

Splits and Phases: 6: HEBRON ROAD & ROUTE 6

Lane Group	EBT	EBR	WBL	WBT	NBL	NBR
Lane Group Flow (vph)	508	96	46	1252	154	64
v/c Ratio	0.48	0.10	0.08	1.00	0.59	0.04
Control Delay	11.9	2.7	3.8	39.8	35.9	0.5
Queue Delay	0.0	0.0	0.0	0.0	0.0	0.0
Total Delay	11.9	2.7	3.8	39.8	35.9	0.5
Queue Length 50th (ft)	124	0	4	~453	60	0
Queue Length 95th (ft)	220	18	15	#855	99	4
Internal Link Dist (ft)	1607			3810	205	
Turn Bay Length (ft)		250	95			90
Base Capacity (vph)	1061	963	632	1255	493	1523
Starvation Cap Reductn	0	0	0	0	0	0
Spillback Cap Reductn	0	0	0	0	0	0
Storage Cap Reductn	0	0	0	0	0	0
Reduced v/c Ratio	0.48	0.10	0.07	1.00	0.31	0.04

Intersection Summary

~ Volume exceeds capacity, queue is theoretically infinite.
Queue shown is maximum after two cycles.

95th percentile volume exceeds capacity, queue may be longer.
Queue shown is maximum after two cycles.

Movement	EBT	EBR	WBL	WBT	NBL	NBR
Lane Configurations						
Traffic Volume (vph)	427	81	41	1114	125	52
Future Volume (vph)	427	81	41	1114	125	52
Ideal Flow (vphpl)	1900	1900	1900	1900	1900	1900
Lane Width	12	11	11	12	11	12
Total Lost time (s)	7.0	7.0	4.0	7.0	4.7	4.7
Lane Util. Factor	1.00	1.00	1.00	1.00	1.00	1.00
Frt	1.00	0.85	1.00	1.00	1.00	0.85
Flt Protected	1.00	1.00	0.95	1.00	0.95	1.00
Satd. Flow (prot)	1776	1546	1745	1845	1728	1615
Flt Permitted	1.00	1.00	0.39	1.00	0.95	1.00
Satd. Flow (perm)	1776	1546	710	1845	1728	1615
Peak-hour factor, PHF	0.84	0.84	0.89	0.89	0.81	0.81
Adj. Flow (vph)	508	96	46	1252	154	64
RTOR Reduction (vph)	0	40	0	0	0	17
Lane Group Flow (vph)	508	56	46	1252	154	47
Heavy Vehicles (%)	7%	1%	0%	3%	1%	0%
Turn Type	NA	Prot	pm+pt	NA	Prot	custom
Protected Phases	2	2	1	6	8	8
Permitted Phases			6			2
Actuated Green, G (s)	42.1	42.1	49.5	49.5	10.7	52.8
Effective Green, g (s)	42.1	42.1	49.5	49.5	10.7	52.8
Actuated g/C Ratio	0.59	0.59	0.69	0.69	0.15	0.73
Clearance Time (s)	7.0	7.0	4.0	7.0	4.7	4.7
Vehicle Extension (s)	3.0	3.0	2.0	3.0	2.0	2.0
Lane Grp Cap (vph)	1039	905	537	1270	257	1185
v/s Ratio Prot	0.29	0.04	0.00	c0.68	c0.09	0.01
v/s Ratio Perm			0.05			0.02
v/c Ratio	0.49	0.06	0.09	0.99	0.60	0.04
Uniform Delay, d1	8.7	6.4	4.1	10.9	28.6	2.6
Progression Factor	1.00	1.00	1.00	1.00	1.00	1.00
Incremental Delay, d2	0.4	0.0	0.0	21.7	2.5	0.0
Delay (s)	9.0	6.4	4.2	32.5	31.1	2.6
Level of Service	A	A	A	C	C	A
Approach Delay (s)	8.6			31.5	22.7	
Approach LOS	A			C	C	

Intersection Summary			
HCM 2000 Control Delay	24.1	HCM 2000 Level of Service	C
HCM 2000 Volume to Capacity ratio	0.98		
Actuated Cycle Length (s)	71.9	Sum of lost time (s)	15.7
Intersection Capacity Utilization	75.3%	ICU Level of Service	D
Analysis Period (min)	15		

c Critical Lane Group

Lane Group	SET	SER	NWL	NWT	NEL	NER
Lane Configurations						
Traffic Volume (vph)	452	0	0	963	0	0
Future Volume (vph)	452	0	0	963	0	0
Ideal Flow (vphpl)	1900	1900	1900	1900	1900	1900
Lane Util. Factor	1.00	1.00	1.00	1.00	1.00	1.00
Frt						
Flt Protected						
Satd. Flow (prot)	1900	0	0	1900	1900	0
Flt Permitted						
Satd. Flow (perm)	1900	0	0	1900	1900	0
Link Speed (mph)	40			40	20	
Link Distance (ft)	3890			559	244	
Travel Time (s)	66.3			9.5	8.3	
Peak Hour Factor	0.90	0.90	0.91	0.91	0.92	0.92
Adj. Flow (vph)	502	0	0	1058	0	0
Shared Lane Traffic (%)						
Lane Group Flow (vph)	502	0	0	1058	0	0
Enter Blocked Intersection	No	No	No	No	No	No
Lane Alignment	Left	Right	Left	Left	Left	Right
Median Width(ft)	11			11	12	
Link Offset(ft)	0			0	0	
Crosswalk Width(ft)	16			16	16	
Two way Left Turn Lane						
Headway Factor	1.00	1.00	1.00	1.00	1.00	1.00
Turning Speed (mph)		9	15		15	9
Sign Control	Free			Free	Stop	

Intersection Summary	
Area Type:	Other
Control Type: Unsignalized	
Intersection Capacity Utilization 54.0%	ICU Level of Service A
Analysis Period (min) 15	

Movement	SET	SER	NWL	NWT	NEL	NER
Lane Configurations						
Traffic Volume (veh/h)	452	0	0	963	0	0
Future Volume (Veh/h)	452	0	0	963	0	0
Sign Control	Free			Free	Stop	
Grade	0%			0%	0%	
Peak Hour Factor	0.90	0.90	0.91	0.91	0.92	0.92
Hourly flow rate (vph)	502	0	0	1058	0	0
Pedestrians						
Lane Width (ft)						
Walking Speed (ft/s)						
Percent Blockage						
Right turn flare (veh)						
Median type	None			None		
Median storage veh)						
Upstream signal (ft)						
pX, platoon unblocked						
vC, conflicting volume			502		1560	502
vC1, stage 1 conf vol						
vC2, stage 2 conf vol						
vCu, unblocked vol			502		1560	502
tC, single (s)			4.1		6.4	6.2
tC, 2 stage (s)						
tF (s)			2.2		3.5	3.3
p0 queue free %			100		100	100
cM capacity (veh/h)			1073		125	573

Direction, Lane #	SE 1	NW 1	NE 1
Volume Total	502	1058	0
Volume Left	0	0	0
Volume Right	0	0	0
cSH	1700	1073	1700
Volume to Capacity	0.30	0.00	0.00
Queue Length 95th (ft)	0	0	0
Control Delay (s)	0.0	0.0	0.0
Lane LOS			A
Approach Delay (s)	0.0	0.0	0.0
Approach LOS			A

Intersection Summary			
Average Delay	0.0		
Intersection Capacity Utilization	54.0%	ICU Level of Service	A
Analysis Period (min)	15		

Lane Group	EBL	EBT	WBT	WBR	SBL	SBR
Lane Configurations						
Traffic Volume (vph)	12	509	1116	31	51	27
Future Volume (vph)	12	509	1116	31	51	27
Ideal Flow (vphpl)	1900	1900	1900	1900	1900	1900
Lane Width (ft)	11	12	12	12	12	12
Storage Length (ft)	90			0	0	0
Storage Lanes	1			0	1	0
Taper Length (ft)	40				25	
Lane Util. Factor	1.00	1.00	1.00	1.00	1.00	1.00
Frt			0.996		0.953	
Flt Protected	0.950				0.968	
Satd. Flow (prot)	1745	1776	1839	0	1753	0
Flt Permitted	0.097				0.968	
Satd. Flow (perm)	178	1776	1839	0	1753	0
Right Turn on Red				Yes		Yes
Satd. Flow (RTOR)			3		30	
Link Speed (mph)		40	40		30	
Link Distance (ft)		479	1687		327	
Travel Time (s)		8.2	28.8		7.4	
Peak Hour Factor	0.93	0.93	0.86	0.86	0.91	0.91
Heavy Vehicles (%)	0%	7%	3%	0%	0%	0%
Adj. Flow (vph)	13	547	1298	36	56	30
Shared Lane Traffic (%)						
Lane Group Flow (vph)	13	547	1334	0	86	0
Enter Blocked Intersection	No	No	No	No	No	No
Lane Alignment	Left	Left	Left	Right	Left	Right
Median Width(ft)		11	11		12	
Link Offset(ft)		0	0		0	
Crosswalk Width(ft)		16	16		16	
Two way Left Turn Lane						
Headway Factor	1.04	1.00	1.00	1.00	1.00	1.00
Turning Speed (mph)	15			9	15	9
Number of Detectors	3	2	2		3	
Detector Template						
Leading Detector (ft)	32	340	351		26	
Trailing Detector (ft)	-5	178	174		-7	
Detector 1 Position(ft)	-5	178	174		-7	
Detector 1 Size(ft)	6	6	6		6	
Detector 1 Type	Cl+Ex	Cl+Ex	Cl+Ex		Cl+Ex	
Detector 1 Channel						
Detector 1 Extend (s)	0.0	0.0	0.0		0.0	
Detector 1 Queue (s)	0.0	0.0	0.0		0.0	
Detector 1 Delay (s)	0.0	0.0	0.0		0.0	
Detector 2 Position(ft)	10	334	345		10	
Detector 2 Size(ft)	6	6	6		6	
Detector 2 Type	Cl+Ex	Cl+Ex	Cl+Ex		Cl+Ex	
Detector 2 Channel						
Detector 2 Extend (s)	0.0	0.0	0.0		0.0	
Detector 3 Position(ft)	26				20	

Lane Group	EBL	EBT	WBT	WBR	SBL	SBR
Detector 3 Size(ft)	6				6	
Detector 3 Type	Cl+Ex				Cl+Ex	
Detector 3 Channel						
Detector 3 Extend (s)	0.0				0.0	
Turn Type	pm+pt	NA	NA		Prot	
Protected Phases	5	2	6		4	
Permitted Phases	2					
Detector Phase	5	2	6		4	
Switch Phase						
Minimum Initial (s)	5.0	5.0	5.0		5.0	
Minimum Split (s)	9.0	10.6	10.6		9.0	
Total Split (s)	9.5	41.5	32.0		23.6	
Total Split (%)	14.6%	63.7%	49.2%		36.3%	
Maximum Green (s)	5.5	35.9	26.4		19.6	
Yellow Time (s)	3.0	4.4	4.4		3.0	
All-Red Time (s)	1.0	1.2	1.2		1.0	
Lost Time Adjust (s)	0.0	0.0	0.0		0.0	
Total Lost Time (s)	4.0	5.6	5.6		4.0	
Lead/Lag	Lead		Lag			
Lead-Lag Optimize?						
Vehicle Extension (s)	2.0	3.0	3.0		2.0	
Recall Mode	None	Min	None		None	
Act Effct Green (s)	40.8	41.6	39.8		6.5	
Actuated g/C Ratio	0.79	0.81	0.77		0.13	
v/c Ratio	0.04	0.38	0.94		0.35	
Control Delay	2.8	4.1	27.6		18.9	
Queue Delay	0.0	0.0	0.0		0.0	
Total Delay	2.8	4.1	27.6		18.9	
LOS	A	A	C		B	
Approach Delay		4.1	27.6		18.9	
Approach LOS		A	C		B	

Intersection Summary	
Area Type: Other	
Cycle Length: 65.1	
Actuated Cycle Length: 51.4	
Natural Cycle: 90	
Control Type: Actuated-Uncoordinated	
Maximum v/c Ratio: 0.94	
Intersection Signal Delay: 20.6	Intersection LOS: C
Intersection Capacity Utilization 73.1%	ICU Level of Service D
Analysis Period (min) 15	

Splits and Phases: 3: ROUTE 6 & LONG HILL ROAD

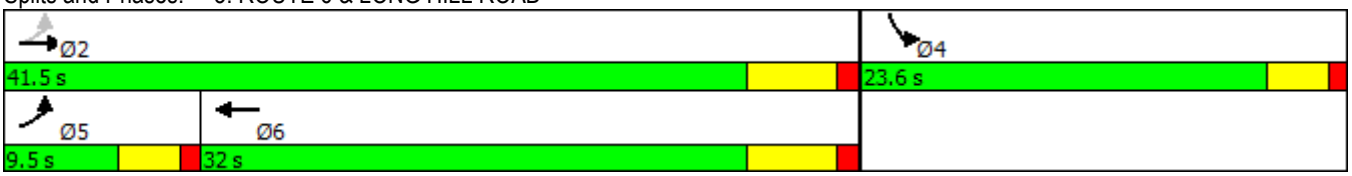

Lane Group	EBL	EBT	WBT	SBL
Lane Group Flow (vph)	13	547	1334	86
v/c Ratio	0.04	0.38	0.94	0.35
Control Delay	2.8	4.1	27.6	18.9
Queue Delay	0.0	0.0	0.0	0.0
Total Delay	2.8	4.1	27.6	18.9
Queue Length 50th (ft)	1	55	~347	18
Queue Length 95th (ft)	4	121	#803	48
Internal Link Dist (ft)		399	1607	247
Turn Bay Length (ft)	90			
Base Capacity (vph)	310	1450	1426	691
Starvation Cap Reductn	0	0	0	0
Spillback Cap Reductn	0	0	0	0
Storage Cap Reductn	0	0	0	0
Reduced v/c Ratio	0.04	0.38	0.94	0.12

Intersection Summary

~ Volume exceeds capacity, queue is theoretically infinite.
Queue shown is maximum after two cycles.

95th percentile volume exceeds capacity, queue may be longer.
Queue shown is maximum after two cycles.

Movement	EBL	EBT	WBT	WBR	SBL	SBR
Lane Configurations						
Traffic Volume (vph)	12	509	1116	31	51	27
Future Volume (vph)	12	509	1116	31	51	27
Ideal Flow (vphpl)	1900	1900	1900	1900	1900	1900
Lane Width	11	12	12	12	12	12
Total Lost time (s)	4.0	5.6	5.6		4.0	
Lane Util. Factor	1.00	1.00	1.00		1.00	
Frt	1.00	1.00	1.00		0.95	
Flt Protected	0.95	1.00	1.00		0.97	
Satd. Flow (prot)	1745	1776	1839		1753	
Flt Permitted	0.10	1.00	1.00		0.97	
Satd. Flow (perm)	177	1776	1839		1753	
Peak-hour factor, PHF	0.93	0.93	0.86	0.86	0.91	0.91
Adj. Flow (vph)	13	547	1298	36	56	30
RTOR Reduction (vph)	0	0	1	0	28	0
Lane Group Flow (vph)	13	547	1333	0	58	0
Heavy Vehicles (%)	0%	7%	3%	0%	0%	0%
Turn Type	pm+pt	NA	NA		Prot	
Protected Phases	5	2	6		4	
Permitted Phases	2					
Actuated Green, G (s)	42.4	42.4	37.4		4.3	
Effective Green, g (s)	42.4	42.4	37.4		4.3	
Actuated g/C Ratio	0.75	0.75	0.66		0.08	
Clearance Time (s)	4.0	5.6	5.6		4.0	
Vehicle Extension (s)	2.0	3.0	3.0		2.0	
Lane Grp Cap (vph)	161	1337	1221		133	
v/s Ratio Prot	0.00	c0.31	c0.72		c0.03	
v/s Ratio Perm	0.06					
v/c Ratio	0.08	0.41	1.09		0.44	
Uniform Delay, d1	14.2	2.5	9.4		24.8	
Progression Factor	1.00	1.00	1.00		1.00	
Incremental Delay, d2	0.1	0.2	54.6		0.8	
Delay (s)	14.3	2.7	64.0		25.7	
Level of Service	B	A	E		C	
Approach Delay (s)		3.0	64.0		25.7	
Approach LOS		A	E		C	

Intersection Summary			
HCM 2000 Control Delay	45.1	HCM 2000 Level of Service	D
HCM 2000 Volume to Capacity ratio	1.02		
Actuated Cycle Length (s)	56.3	Sum of lost time (s)	13.6
Intersection Capacity Utilization	73.1%	ICU Level of Service	D
Analysis Period (min)	15		

c Critical Lane Group