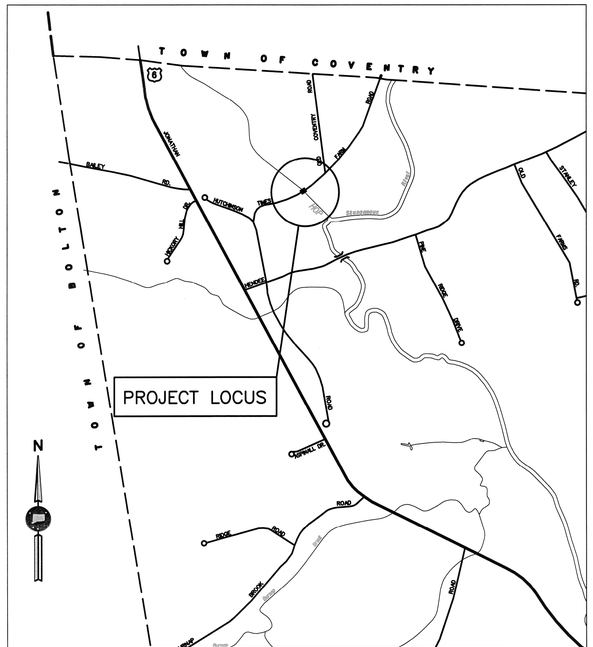

TOWN OF ANDOVER, CONNECTICUT

PLAN FOR

REHABILITATION OF BRIDGE NO. 04581
TIMES FARM ROAD OVER
THE HOP RIVER

ROADWAY RECONSTRUCTION
FROM STA. 12+45 TO STA. 14+60
LENGTH 215 feet

DESIGN SCALES
- PLAN 1" = 20'
- PROFILE HOR. 1" = 20' VERT. 1" = 2'
- CROSS SECTIONS 1" = 5'

OTHER SCALES AS NOTED

TO BE MAINTAINED BY THE TOWN OF ANDOVER

FEDERAL AID PROJECT NO.: BHZ-6001(006)
STATE PROJECT NO.: 0001-0105

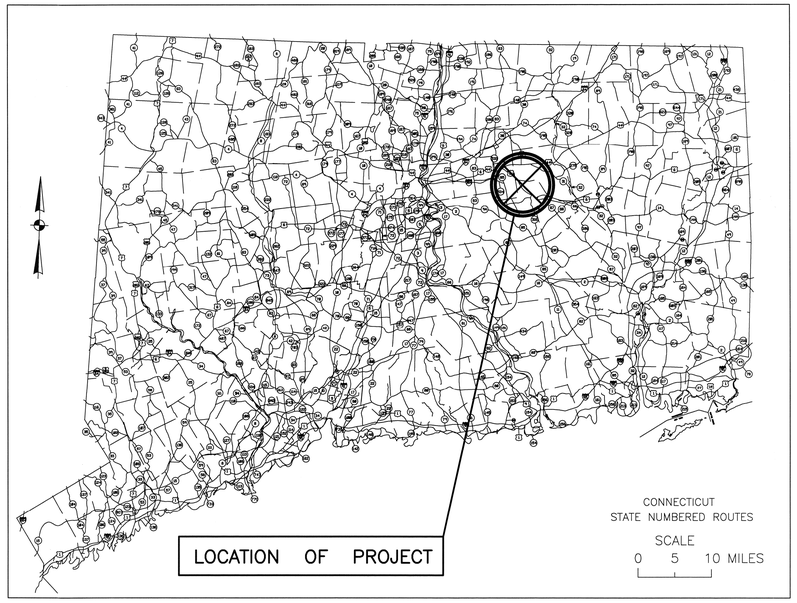

2004 SPECIFICATIONS, FORM 816, INCLUDING SUPPLEMENT THERETO DATED JANUARY 2016 GOVERN.
ALL ELEVATIONS ON THIS PROJECT BASED ON N.G.V.D. OF 1929
COORDINATE DATA ON THIS PROJECT BASED ON N.A.D. 83/87

LIST OF DRAWING REVISIONS

SHEET NO.	DESCRIPTION	DATE	BY

LIST OF DRAWINGS

SHEET NO.	TITLE	SHEET NO.	STANDARD DRAWINGS
1	TITLE SHEET	HW-0601_01	FIGURES FOR DATES ON BRIDGE PARAPETS
2	DETAILED ESTIMATE SHEET	HW-0822_01	TEMPORARY PRECAST CONCRETE BARRIER CURB
3	TYPICAL SECTION	HW-0910_01	W-BEAM METAL BEAM RAIL HARDWARE
4	CONSTRUCTION PLAN	HW-0910_02	METAL BEAM RAIL (TYPE R-B 350) GUIDERAIL
5	PROFILE SHEET	HW-0910_07	R-B 350 BRIDGE ATTACHMENT VERTICAL SHAPE PARAPET
6-24	STRUCTURE SHEETS	HW-0911_01	R-B END ANCHORAGE TYPE I AND II
25-26	CROSS SECTIONS	HW-0921_01	DRIVEWAY RAMPS AND SIDEWALKS
27	LANDSCAPE DESIGN PLAN	HW-0925_01	PAVEMENT FOR RAILING
		HW-0949_01	PLANTING DETAILS FOR TREES
		HW-0949_02	PLANTING DETAILS FOR SHRUBS
		TR-1205_01	DELINEATION, DELINEATORS AND OBJECT MARKER DETAILS
		TR-1208_01	SIGN SUPPORT & SIGN PLACEMENT DETAILS, GORE EXIT SIGN
		TR-1208_02	METAL SIGN POSTS AND SIGN MOUNTING DETAILS
		TR-1210_03	SPECIAL DETAILS AND PAVEMENT MARKINGS FOR TWO-WAY HIGHWAYS
		TR-1220_01	SIGNS FOR CONSTRUCTION AND PERMIT OPERATIONS
		TR-1220_02	CONSTRUCTION SIGN SUPPORTS AND CHANNELIZING DEVICES

IT IS THE RESPONSIBILITY OF EACH BIDDER AND ALL OTHER INTERESTED PARTIES TO OBTAIN ALL BIDDING RELATED INFORMATION AND DOCUMENTS FROM OFFICIAL SOURCES WITHIN THE TOWN OF ANDOVER.

PERSONS AND/OR ENTITIES WHICH REPRODUCE AND/OR MAKE SUCH INFORMATION AVAILABLE BY ANY MEANS ARE NOT AUTHORIZED BY THE TOWN OF ANDOVER TO DO SO AND MAY BE LIABLE FOR CLAIMS RESULTING FROM THE DISSEMINATION OF UNOFFICIAL, INCOMPLETE AND/OR INACCURATE INFORMATION.

DESIGN CRITERIA:

DESIGN STANDARD:	CTDOT HIGHWAY DESIGN MANUAL, 2003 EDITION
DESIGN CLASSIFICATION:	RURAL LOCAL ROAD
POSTED SPEED:	30 MPH
DESIGN SPEED:	30 MPH
2013 ADT:	133 VPD

STANDARD CONVENTIONS

North Arrow W/No.Coor.
Grid Arrow
Edge Of Road
Concrete Pavement
Dirt Road
B.C.I.C.
Granite Curb
Guide Rail
Concrete Median Barrier
Bit.Walk
Conc.Sidewalk
Railroad Tracks
Chain Link Fence
Rustic Fence
Pipe Fence
Board Fence
Water Edge
Stream
Ditch
TOWN LINE
Limit Of Marsh
Stone Wall
Ledge Outcrop
Inland Wetland Limits
STATE LINE
Power Line
Swamp
Building
Transmission Tower
Riprap
Hedge Row
Tree Line
Shrub
Evergreen Tree
Deciduous Tree
Retaining Wall
Highway Line
Street Line
Property Line
Lot Line
Easement Line

DESIGNED BY:

CME
CME Associates, Inc.
333 East River Drive
East Hartford, CT 06108

STATE OF CONNECTICUT BRYAN L. BUSCH No. 21067 LICENSED PROFESSIONAL ENGINEER

DATE 7/12/16
BRYAN L. BUSCH

APPROVED BY:

DATE 10-12-16
TOWN OF ANDOVER

REGION NO.	STATE	TOWN(S)	FED. AID PROJ. NO.	PROJ. NO.	YEAR	ROUTE NO.	SHEET NO.	TOTAL SHEETS
10	CONN.	ANDOVER	BHZ-6001(006)	0001-0105	2016	N/A	1	27

HIGHWAY ITEMS

ITEM NUMBER	0201001	0201020	0201501	0202000	0202529	0209001	0212000	0219001	0406170	0406171	0406236	0703012	0755014	0822001	0822002	0910170	0910173	0911924	0912499	0922501	0925201	0944000	0950005	0969060A	0970007	0971001A	0975004	0980001	1205216	1212010	1220027	1807012	1807013	1807014	1807101
ITEM	CLEARING AND GRUBBING	REMOVE AND RESET WOOD FENCE	RESET MAILBOX	EARTH EXCAVATION	CUT BITUMINOUS CONCRETE PAVEMENT	FORMATION OF SUBGRADE	SUBBASE	SEDIMENTATION CONTROL SYSTEM	HMA S1	HMA S0.5	MATERIAL FOR TACK COAT	IMODIFIED RIPRAP	GEOTEXTILE (SEPARATION-HIGH SURVIVABILITY)	TEMPORARY PRECAST CONCRETE BARRIER CURB	RELOCATED TEMPORARY PRECAST CONCRETE BARRIER CURB	METAL BEAM RAIL (TYPE R-B 350)	R-B 350 BRIDGE ATTACHMENT-VERTICAL SHAPED PARAPET	R-B END ANCHORAGE TYPE II	REMOVE CABLE GUIDE RAIL	BITUMINOUS CONCRETE DRIVEWAY	PAVEMENT FOR RAILING	FURNISHING AND PLACING TOPSOIL	TURF ESTABLISHMENT	CONSTRUCTION FIELD OFFICE, SMALL	TRAFFICPERSON (UNIFORMED FLAGGER)	MAINTENANCE AND PROTECTION OF TRAFFIC	MOBILIZATION AND PROJECT CLOSEOUT	CONSTRUCTION STAKING	TYPE DE-7C DELINEATOR	TEMPORARY PLASTIC PAVEMENT MARKING TAPE - 12" WHITE	CONSTRUCTION SIGNS	TEMPORARY IMPACT ATTENUATION SYSTEM TYPE A MODULE 700LB	TEMPORARY IMPACT ATTENUATION SYSTEM TYPE A MODULE 1400LB	TEMPORARY IMPACT ATTENUATION SYSTEM TYPE A MODULE 2100LB	RELOCATION OF TEMPORARY IMPACT ATTENUATION SYSTEM TYPE A
UNIT	LS	LF	EA	CY	LF	SY	CY	LF	TON	TON	GAL	CY	SY	LF	LF	LF	EA	EA	LF	SY	SY	SY	SY	MO	HR	LS	LS	LS	EA	LF	SF	EA	EA	EA	EA
PROJECT# 01-105	LS	60	2	280	42	490	200	340	140	111	100	50	146	180	160	300	4	4	400	13	74	120	120	12	500	LS	LS	LS	13	22	186	2	8	4	2
SUBTOTAL	LS	60	2	280	42	490	200	340	140	111	100	50	146	180	160	300	4	4	400	13	74	120	120	12	500	LS	LS	LS	13	22	186	2	8	4	2
UNASSIGNED	–	–	–	–	–	–	–	–	–	–	–	–	–	–	–	–	–	–	–	–	–	–	–	–	–	–	–	–	–	–	–	–	–	–	–
TOTAL	LS	60	2	280	42	490	200	340	140	111	100	50	146	180	160	300	4	4	400	13	74	120	120	12	500	LS	LS	LS	13	22	186	2	8	4	2

BRIDGE ITEMS

ITEM NUMBER	0202903A	0202215A	0203202	0204001	0204151A	0213100	0216000	0406171	0406173	0406236	0502223A	0503001A	0506020	0509001	0514222	0521001	0601000	0601073A	0601097A	0601201	0602006	0602965A	0707001	0708001	0713040	0714050	0822005A	0822006A	0904936A	0974001A
ITEM	LEAD COMPLIANCE FOR MISCELLANEOUS EXTERIOR TASKS	EXCAVATION AND REUSE OF EXISTING CHANNEL BOTTOM MATERIAL	STRUCTURE EXCAVATION - EARTH (EXCLUDING COFFERDAM AND DEWATERING)	COFFERDAM AND DEWATERING	HANDLING WATER	GRANULAR FILL	PERVIOUS STRUCTURE BACKFILL	HMA S0.5	HMA S0.25	MATERIAL FOR TACK COAT	TEMPORARY BRIDGE AND APPROACHES	REMOVAL OF SUPERSTRUCTURE	PERMANENT ANCHOR TIEBACK SYSTEM	WELDED STUDS	PRESTRESSED DECK UNITS (4'-0"X1'-3")	ELASTOMERIC BEARING PADS	CLASS "A" CONCRETE	CLASS "S" CONCRETE	VARIABLE DEPTH PATCH	CLASS "F" CONCRETE	DEFORMED STEEL BARS-EPOXY COATED	DRILLING HOLES AND GROUTING REINFORCING BARS	MEMBRANE WATERPROOFING (WOVEN GLASS FABRIC)	DAMPPROOFING	PERMANENT STEEL SHEET PILING	TEMPORARY EARTH RETAINING SYSTEM	TEMPORARY PRECAST CONCRETE BARRIER CURB (STRUCTURE)	RELOCATED TEMPORARY PRECAST CONCRETE BARRIER CURB (STRUCTURE)	METAL BRIDGE RAIL (MODIFIED POST ALUMINUM)	REMOVAL OF EXISTING MASONRY
UNIT	LS	SY	CY	LF	LS	CY	CY	TON	TON	GAL	LS	LS	EA	EA	LF	CI	CY	CF	CF	CY	LB	EA	SY	SY	SF	SF	LF	LF	L.F.	C.Y.
PROJECT# 01-105	LS	190	200	250	LS	5	60	13	9	25	LS	LS	8	130	187	2640	65	2	11	16	7600	340	95	42	4200	630	80	20	59	25
SUBTOTAL	LS	190	200	250	LS	5	60	13	9	25	LS	LS	8	130	187	2640	65	2	11	16	7600	340	95	42	4200	630	80	20	59	25
UNASSIGNED	–	–	–	–	–	–	–	–	–	–	–	–	–	–	–	–	–	–	–	–	–	–	–	–	–	–	–	–	–	–
TOTAL	LS	190	200	250	LS	5	60	13	9	25	LS	LS	8	130	187	2640	65	2	11	16	7600	340	95	42	4200	630	80	20	59	25

LANDSCAPE ITEMS

ITEM NUMBER	0949000	0949099	0949132	0949226
ITEM	WOOD CHIP MULCH	CORNUS AMOMUM, SILKY DOGWOOD 18"-24" HT. B.B.	SAMBUCUS CANADENSIS, COMMON ELDERBERRY 18"-24" HT. CONTAINER	ILEX VERTICILLATA, COMMON WINTERBERRY 18"-24" HT. B.B.
UNIT	SY	EA	EA	EA
PROJECT# 01-105	70	14	13	13
SUBTOTAL	70	14	13	13
UNASSIGNED	–	–	–	–
TOTAL	70	14	13	13

REV.	DATE	REVISION DESCRIPTION	SHEET NO.

Filename: 02_Detailed Estimate Sheet.dgn Plotted: 7/12/2016

THE INFORMATION, INCLUDING ESTIMATED QUANTITIES OF WORK, SHOWN ON THESE SHEETS IS BASED ON LIMITED INVESTIGATIONS AND IS IN NO WAY WARRANTED TO INDICATE THE CONDITIONS OF ACTUAL QUANTITIES OF WORK WHICH WILL BE REQUIRED.

DESIGNER/DRAFTER: DEH
CHECKED BY: RRC

TOWN OF ANDOVER
CONNECTICUT

CME
CME Associates, Inc.
333 East River Drive
East Hartford, CT 06108

PROJECT TITLE:
REHABILITATION OF BRIDGE NO. 04581
TIMES FARM ROAD OVER
THE HOP RIVER

TOWN: ANDOVER

DRAWING TITLE: DETAILED ESTIMATE

PROJECT NO. 01-105
DRAWING NO. DET-1
SHEET NO. 2

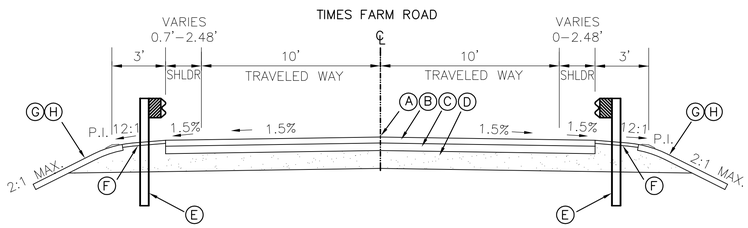

TYPICAL ROADWAY SECTION

SCALE: 1" = 4'

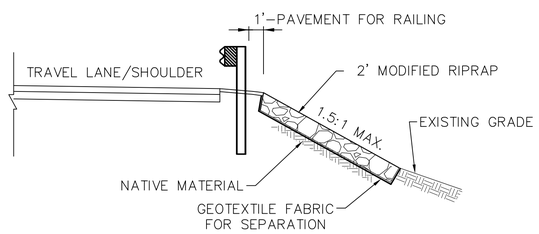

MODIFIED RIPRAP DETAIL

N.T.S.

LEGEND

- (A) POINT OF GRADE APPLICATION
- (B) 4" HMA S0.5
- (C) 5" HMA S1
- (D) 12" SUBBASE
- (E) MBR (TYPE RB–350)
- (F) PAVEMENT FOR RAILING – 2" BITUMINOUS CONCRETE
- (G) 4" TOP SOIL
- (H) TURF ESTABLISHMENT

NOTES:

1. "MATERIAL FOR TACK COAT" SHALL BE APPLIED BETWEEN PAVEMENT COURSES AND TO ALL PAVEMENT JOINTS.
2. TRANSITION PAVEMENT AT PROJECT LIMITS TO MATCH EXISTING CROSS SLOPES.
3. THE COST OF SAWCUTTING EXISTING PAVEMENT SHALL BE INCLUDED IN THE COST OF ITEM "CUT BITUMINOUS CONCRETE PAVEMENT".
4. THE COST OF THE 2" BITUMINOUS CONCRETE PAVEMENT FOR RAILING SHALL BE PAID FOR UNDER THE ITEM "PAVEMENT FOR RAILING".
5. THE TOP 2" LIFT OF HMA S0.5 SHALL BE MADE CONTINUOUS BETWEEN PROJECT LIMITS.

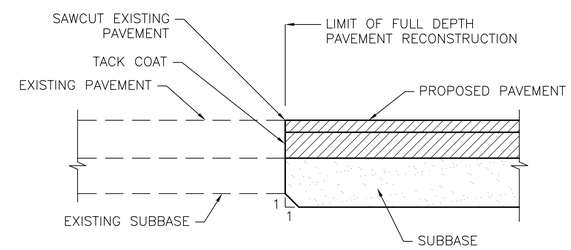

PAVEMENT TRANSITION DETAIL

N.T.S

REV.	DATE	REVISION DESCRIPTION	SHEET NO.

Filename: TYP– XSECTION.dwg Plotted: 06/30/16

DESIGNER/DRAFTER: C.L.ROGERS/R.CUTLER
CHECKED BY: S.YOUNG
SCALE AS NOTED

TOWN OF ANDOVER
CONNECTICUT

CME
CME Associates, Inc.
333 East River Drive
East Hartford, CT 06108

PROJECT TITLE:
REHABILITATION OF BRIDGE NO. 04581
TIMES FARM ROAD OVER
THE HOP RIVER

TOWN: ANDOVER

DRAWING TITLE: TYPICAL SECTION

PROJECT NO. 01-105
DRAWING NO. TYP-1
SHEET NO. 3

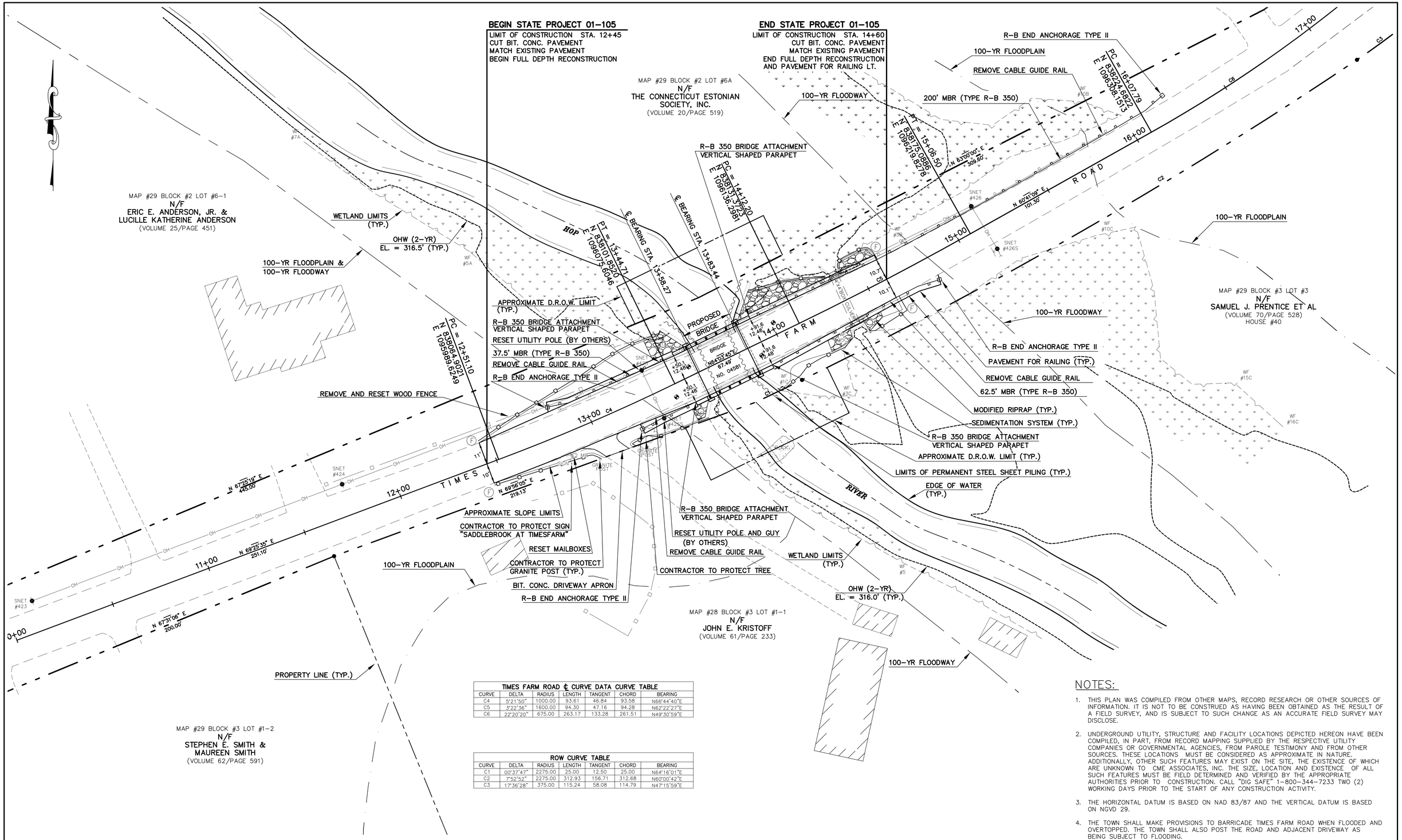

TIMES FARM ROAD ℄ CURVE DATA CURVE TABLE						
CURVE	DELTA	RADIUS	LENGTH	TANGENT	CHORD	BEARING
C4	5°21'50"	1000.00	93.61	46.84	93.58	N66°44'40"E
C5	3°22'36"	1600.00	94.30	47.16	94.28	N62°22'27"E
C6	22°20'20"	675.00	263.17	133.28	261.51	N49°30'59"E

ROW CURVE TABLE						
CURVE	DELTA	RADIUS	LENGTH	TANGENT	CHORD	BEARING
C1	00°37'47"	2275.00	25.00	12.50	25.00	N64°16'01"E
C2	7°52'52"	2275.00	312.93	156.71	312.68	N60°00'42"E
C3	17°36'28"	375.00	115.24	58.08	114.79	N47°15'59"E

NOTES:

1. THIS PLAN WAS COMPILED FROM OTHER MAPS, RECORD RESEARCH OR OTHER SOURCES OF INFORMATION. IT IS NOT TO BE CONSTRUED AS HAVING BEEN OBTAINED AS THE RESULT OF A FIELD SURVEY, AND IS SUBJECT TO SUCH CHANGE AS AN ACCURATE FIELD SURVEY MAY DISCLOSE.
2. UNDERGROUND UTILITY, STRUCTURE AND FACILITY LOCATIONS DEPICTED HEREON HAVE BEEN COMPILED, IN PART, FROM RECORD MAPPING SUPPLIED BY THE RESPECTIVE UTILITY COMPANIES OR GOVERNMENTAL AGENCIES, FROM PAROLE TESTIMONY AND FROM OTHER SOURCES. THESE LOCATIONS MUST BE CONSIDERED AS APPROXIMATE IN NATURE. ADDITIONALLY, OTHER SUCH FEATURES MAY EXIST ON THE SITE, THE EXISTENCE OF WHICH ARE UNKNOWN TO CME ASSOCIATES, INC. THE SIZE, LOCATION AND EXISTENCE OF ALL SUCH FEATURES MUST BE FIELD DETERMINED AND VERIFIED BY THE APPROPRIATE AUTHORITIES PRIOR TO CONSTRUCTION. CALL "DIG SAFE" 1-800-344-7233 TWO (2) WORKING DAYS PRIOR TO THE START OF ANY CONSTRUCTION ACTIVITY.
3. THE HORIZONTAL DATUM IS BASED ON NAD 83/87 AND THE VERTICAL DATUM IS BASED ON NGVD 29.
4. THE TOWN SHALL MAKE PROVISIONS TO BARRICADE TIMES FARM ROAD WHEN FLOODED AND OVERTOPPED. THE TOWN SHALL ALSO POST THE ROAD AND ADJACENT DRIVEWAY AS BEING SUBJECT TO FLOODING.

REV.	DATE	REVISION DESCRIPTION	SHEET NO.

Filename: 2003138_STP Plotted: 06/30/16

HORIZ. SCALE IN FEET
20 10 0 20
GRAPHIC SCALE IN FEET
HORIZ. SCALE 1"=20'

DESIGNER/DRAFTER: C.L.ROGERS/R.CUTLER
CHECKED BY: S.YOUNG

TOWN OF ANDOVER
CONNECTICUT

CME
CME Associates, Inc.
333 East River Drive
East Hartford, CT 06108

PROJECT TITLE:
REHABILITATION OF BRIDGE NO. 04581
TIMES FARM ROAD OVER
THE HOP RIVER

TOWN: ANDOVER

DRAWING TITLE: CONSTRUCTION PLAN

PROJECT NO. 01-105
DRAWING NO. HWY-1
SHEET NO. 4

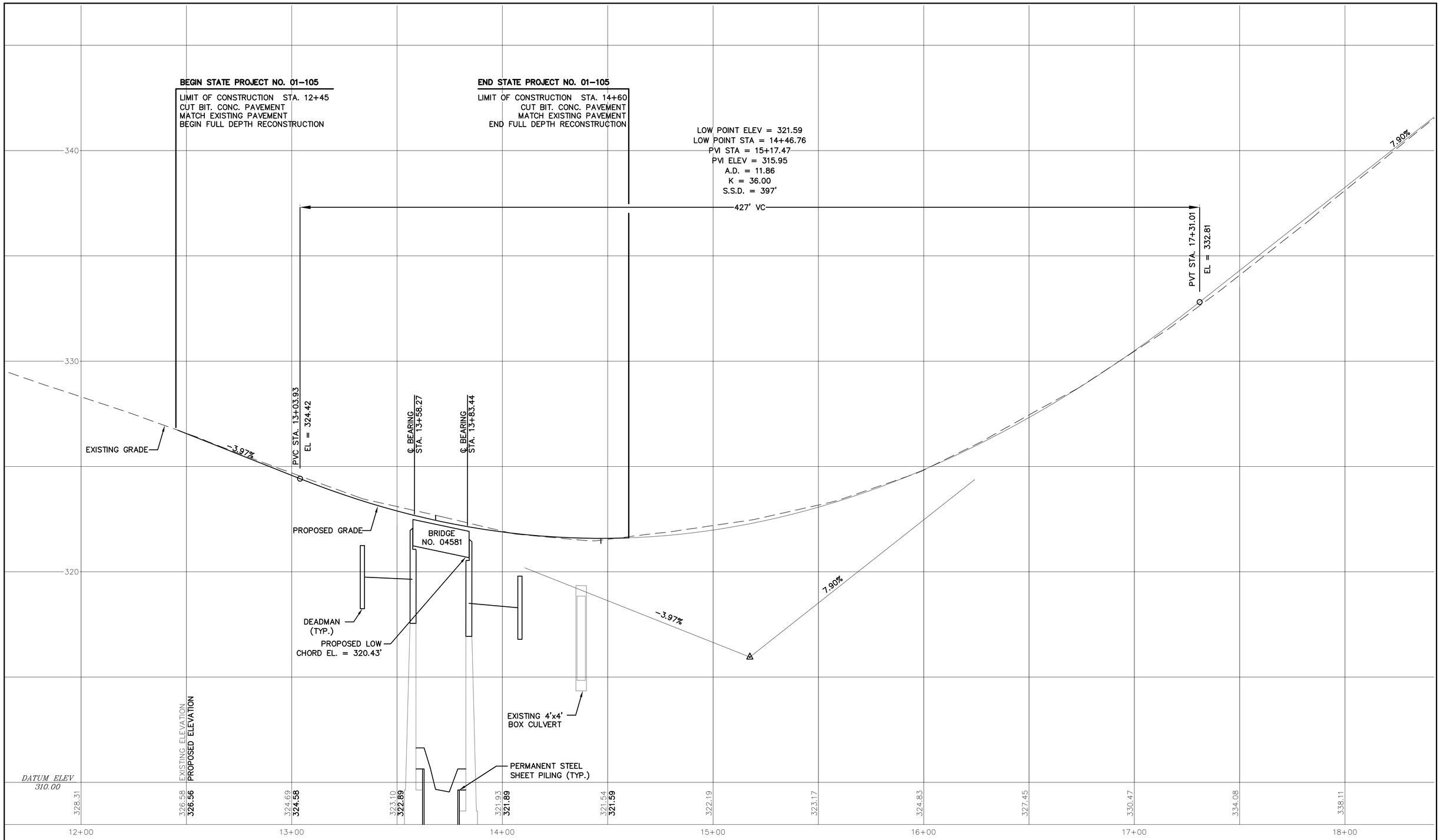

REV.	DATE	REVISION DESCRIPTION	SHEET NO.

Filename: 2003138_STP Plotted: 06/30/16

HORIZ. SCALE IN FEET
20 10 0 20
GRAPHIC SCALE IN FEET

VERT. SCALE IN FEET
2 1 0 2
GRAPHIC SCALE IN FEET

DESIGNER/DRAFTER: C.L.ROGERS/R.CUTLER

CHECKED BY: S.YOUNG

TOWN OF ANDOVER
CONNECTICUT

CME
CME Associates, Inc.
333 East River Drive
East Hartford, CT 06108

PROJECT TITLE:
REHABILITATION OF BRIDGE NO. 04581
TIMES FARM ROAD OVER
THE HOP RIVER

TOWN: ANDOVER

DRAWING TITLE: PROFILE SHEET

PROJECT NO. 01-105

DRAWING NO. HWY-2

SHEET NO. 5

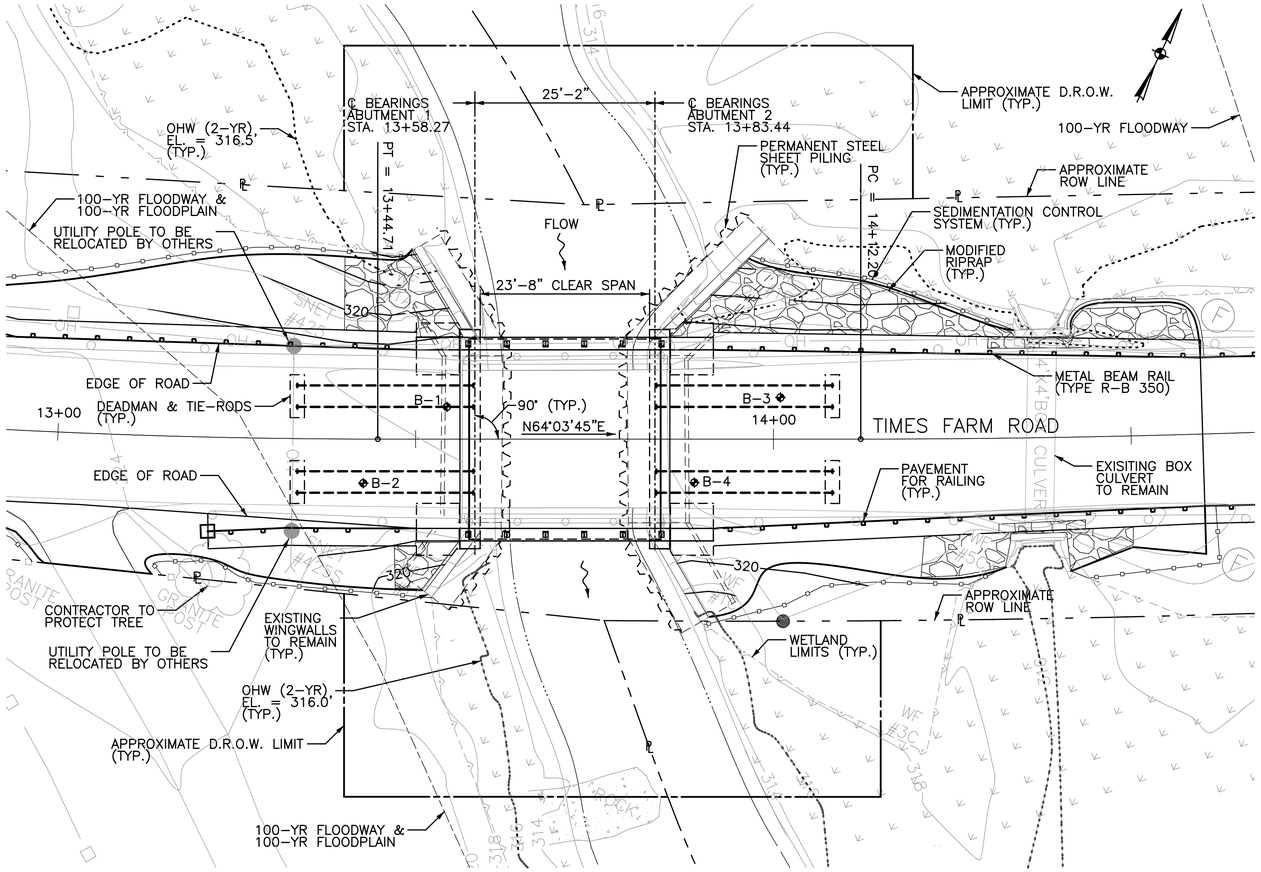

GENERAL PLAN

SCALE: 1" = 10'-0"

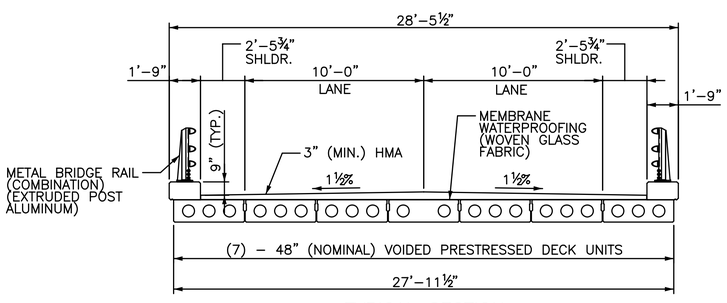

TYPICAL SECTION

SCALE: ¼" = 1'-0"

NOTICE TO BRIDGE INSPECTORS	
THE DEPARTMENT'S BRIDGE SAFETY PROCEDURES REQUIRE THIS BRIDGE TO BE INSPECTED FOR, BUT NOT LIMITED TO, ALL APPROPRIATE COMPONENTS INDICATED IN THE GOVERNING MANUALS FOR BRIDGE INSPECTION. ATTENTION MUST BE GIVEN TO INSPECTING THE FOLLOWING SPECIAL COMPONENTS AND DETAILS. (THE LISTING FOR COMPONENTS FOR SPECIFIC ATTENTION SHALL NOT BE CONSTRUED TO REDUCE THE IMPORTANCE OF INSPECTION OF ANY OTHER COMPONENT OF THE STRUCTURE). THE FREQUENCY OF INSPECTION OF THIS STRUCTURE SHALL BE IN ACCORDANCE WITH THE GOVERNING MANUALS FOR BRIDGE INSPECTION, UNLESS OTHERWISE DIRECTED BY CONNDOT'S MANAGER OF BRIDGE SAFETY AND EVALUATION.	
COMPONENT OR DETAILS	STRUCTURE SHEET NUMBER
NONE	

HYDRAULIC DATA	
DRAINAGE AREA (SQ MI.)	11.9
DESIGN FREQUENCY (YR)	100
DESIGN DISCHARGE (CFS)	1910
AVERAGE DAILY FLOW ELEVATION (FT)	313.00
UPSTREAM DESIGN WATER SURFACE ELEV. (FT)	320.48
DOWNSTREAM DESIGN WATER SURFACE ELEV. (FT)	318.65
MAXIMUM SCOUR ELEVATION (FT) FREQUENCY (YR) DISCHARGE (CFS)	305.1 100 1910
WORST CASE SCOUR SUB-STRUCTURE UNIT	ABUT. 2

CONCRETE DISTRIBUTION (CY)	
SUPERSTRUCTURE	8
SUBSTRUCTURE	28
FOOTING	N/A
TOTAL	36

DRAWING INDEX	
DRAWING TITLE	NO.
GENERAL PLAN	BRG-1
LAYOUT, ELEVATIONS, AND QUANTITIES	BRG-2
BORING LOGS	BRG-3
STAGE 1 CONSTRUCTION	BRG-4
STAGE 2 CONSTRUCTION	BRG-5
STAGE 3 CONSTRUCTION	BRG-6
WATER HANDLING STAGE 2	BRG-7
WATER HANDLING STAGE 3	BRG-8
ABUTMENT PLANS & ELEVATIONS	BRG-9
ABUTMENT & BARRIER WALL DETAILS	BRG-10
PERMANENT SHEET PILING & DEADMAN DETAILS	BRG-11
SUBSTRUCTURE REPAIR DETAILS	BRG-12
FRAMING PLAN	BRG-13
BEAM SECTIONS	BRG-14
BEAM DETAILS	BRG-15
PARAPET END BLOCK DETAILS	BRG-16
METAL BRIDGE RAIL	BRG-17
METAL BRIDGE RAIL DETAILS	BRG-18
T.P.C.B.C. STRUCTURE	BRG-19

GENERAL NOTES

SPECIFICATIONS: CONNECTICUT DEPARTMENT OF TRANSPORTATION FORM 816 (2004), SUPPLEMENTAL SPECIFICATIONS DATED JANUARY 2016 AND SPECIAL PROVISIONS.

DESIGN SPECIFICATIONS: AASHTO LRFD BRIDGE DESIGN SPECIFICATIONS (2012), AS SUPPLEMENTED BY THE CONNECTICUT DEPARTMENT OF TRANSPORTATION BRIDGE DESIGN MANUAL (2003).

ALLOWABLE DESIGN STRESSES:

CLASS "A" CONCRETE	f'c = 3,000 PSI
CLASS "F" CONCRETE	f'c = 4,000 PSI
PRESTRESSED BEAMS	f'c = 6,500 PSI
REINFORCEMENT (ASTM A615 GRADE 60)	Fy = 60,000 PSI

THE SPECIFIED CONCRETE STRENGTH USED IN DESIGN, f'c, OF THE CONCRETE COMPONENTS IS NOTED ABOVE. THE MINIMUM COMPRESSIVE STRENGTH OF THE CONCRETE IN THE CONSTRUCTED COMPONENTS SHALL CONFORM TO THE REQUIREMENTS OF FORM 816 SECTION 6.01 CONCRETE FOR STRUCTURES.

LIVE LOAD:
STANDARD DESIGN VEHICLE: AASHTO HL-93

FUTURE PAVING ALLOWANCE: NONE

BITUMINOUS CONCRETE OVERLAY: THIS SHALL CONSIST OF THREE LAYERS. THE FIRST SHALL BE A UNIFORM LAYER OF HMA S0.25 (1" THICK). THE SECOND LAYER SHALL CONSIST OF HMA S0.5 AND SHALL BE WEDGE SHAPED OF VARYING THICKNESS TO ACHIEVE CROSS SLOPE AS SHOWN ON THE PLANS. THE TOP LAYER SHALL BE A UNIFORM LAYER OF HMA S0.5 (2" THICK).

DECIMAL DIMENSIONS: WHEN DIMENSIONS ARE GIVEN TO LESS THAN THREE DECIMAL PLACES, THE OMITTED DIGITS SHALL BE ASSUMED TO BE ZEROS.

EXISTING DIMENSIONS: DIMENSIONS OF THE EXISTING STRUCTURE SHOWN ON THESE PLANS ARE FOR GENERAL REFERENCE ONLY. THEY HAVE BEEN TAKEN FROM THE ORIGINAL DESIGN DRAWINGS AND ARE NOT GUARANTEED. THE CONTRACTOR SHALL TAKE ALL FIELD MEASUREMENTS NECESSARY TO ASSURE PROPER FIT OF THE FINISHED WORK AND SHALL ASSUME FULL RESPONSIBILITY FOR THEIR ACCURACY. WHEN SHOP DRAWINGS BASED ON FIELD MEASUREMENTS ARE SUBMITTED FOR APPROVAL, THE FIELD MEASUREMENTS SHALL ALSO BE SUBMITTED FOR REFERENCE BY THE REVIEWER.

EXISTING PLANS: FOR INFORMATION RELATING TO THE EXISTING STRUCTURE THAT IS NOT SHOWN, REFER TO ORIGINAL DESIGN DRAWINGS. PLANS ARE LOCATED AT CONNDOT MAP ROOM, 160 PASCONE PLACE, NEWINGTON, CT 06111.

CONCRETE NOTES

CLASS "A" CONCRETE: CLASS "A" CONCRETE SHALL BE USED FOR THE ABUTMENT CAP, BARRIER WALL FOOTINGS, DEADMAN, TIE-ROD ENCASEMENT AND FOOTING CONNECTION POUR.

CLASS "F" CONCRETE: CLASS "F" CONCRETE SHALL BE USED ON THE SUPERSTRUCTURE FOR CURBS AND BARRIER WALL END BLOCKS.

JOINT SEAL: THE COST OF FURNISHING AND INSTALLING JOINT SEAL SHALL BE INCLUDED IN THE COST OF THE ITEM "CLASS 'A' CONCRETE."

EXPOSED EDGES: EXPOSED EDGES OF CONCRETE SHALL BE BEVELED 1"x1" UNLESS DIMENSIONED OTHERWISE.

CONCRETE COVER: ALL REINFORCEMENT SHALL HAVE 2" COVER UNLESS DIMENSIONED OTHERWISE.

REINFORCEMENT: ALL REINFORCEMENT SHALL BE ASTM A615 GRADE 60.

EPOXY COATED REINFORCING BARS: IN PRESTRESSED DECK UNITS THE NON-PRESTRESSED STEEL, INCLUDING THE REINFORCEMENT EXTENDING FROM THE UNITS, SHALL BE EPOXY COATED AND INCLUDED IN THE PAY ITEM "PRESTRESSED DECK UNITS (4'-0" X 1'-3")".

ALL OTHER REINFORCEMENT SHALL BE EPOXY COATED AND INCLUDED IN THE PAY ITEM "DEFORMED STEEL BARS (EPOXY COATED)."

PREFORMED EXPANSION JOINT FILLER: THE COST OF FURNISHING AND INSTALLING PREFORMED EXPANSION JOINT FILLER SHALL BE INCLUDED IN THE COST OF THE ITEM "CLASS 'A' CONCRETE."

CLOSED CELL ELASTOMER: THE COST OF FURNISHING AND INSTALLING CLOSED CELL ELASTOMER SHALL BE INCLUDED IN THE COST OF THE ITEM "CLASS 'A' CONCRETE."

CONSTRUCTION JOINTS: CONSTRUCTION JOINTS, OTHER THAN THOSE SHOWN ON THE PLANS, WILL NOT BE PERMITTED WITHOUT THE PRIOR APPROVAL OF THE ENGINEER.

FELT: THE COST OF FURNISHING AND PLACING 15-POUND ROOFING FELT IS INCLUDED IN THE ITEM FOR "CLASS 'A' CONCRETE".

TRANSPORATION DATA (EST. MAXIMUM VALUES)				
MEMBER	SHIPPING LENGTH	SHIPPING HEIGHT	SHIPPING WIDTH	SHIPPING WEIGHT
ALL	26'-8"	1'-3"	4'-0"	16,000 LBS

REV.	DATE	REVISION DESCRIPTION	SHEET NO.

Filename: BRG_1- General Plan.dgn Plotted: 6/30/2016

THE INFORMATION, INCLUDING ESTIMATED QUANTITIES OF WORK, SHOWN ON THESE SHEETS IS BASED ON LIMITED INVESTIGATIONS AND IS IN NO WAY WARRANTED TO INDICATE THE CONDITIONS OF ACTUAL QUANTITIES OF WORK WHICH WILL BE REQUIRED.

DESIGNER/DRAFTER: DEH
CHECKED BY: RRC
SCALE AS NOTED

TOWN OF ANDOVER
CONNECTICUT

CME
CME Associates, Inc.
333 East River Drive
East Hartford, CT 06108

PROJECT TITLE:
REHABILITATION OF BRIDGE NO. 04581
TIMES FARM ROAD OVER
THE HOP RIVER

TOWN: ANDOVER

DRAWING TITLE: GENERAL PLAN

PROJECT NO. 01-105
DRAWING NO. BRG-1
SHEET NO. 6

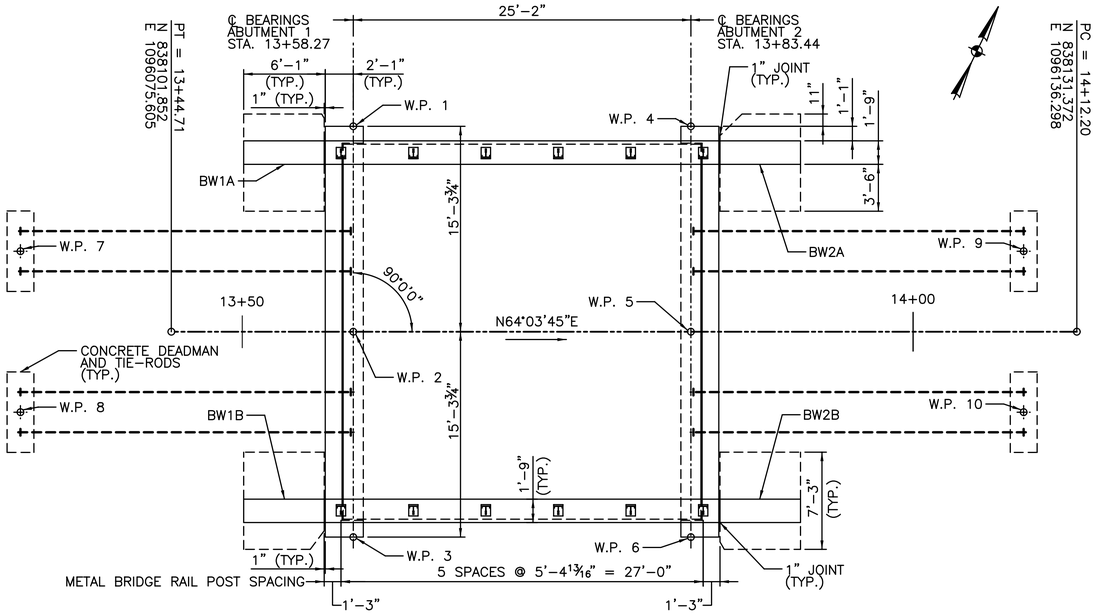

LAYOUT PLAN
SCALE: 3/16" = 1'-0"

WORKING POINT LAYOUT		
WORKING PT	STATION	OFFSET
1	13+58.27	15.31' LT
2	13+58.27	0.0
3	13+58.27	15.31' RT
4	13+83.44	15.31' LT
5	13+83.44	0.0
6	13+83.44	15.31' RT
7	13+33.50	6.00' RT
8	13+33.50	6.00' LT
9	14+08.24	6.00' RT
10	14+08.24	6.00' LT

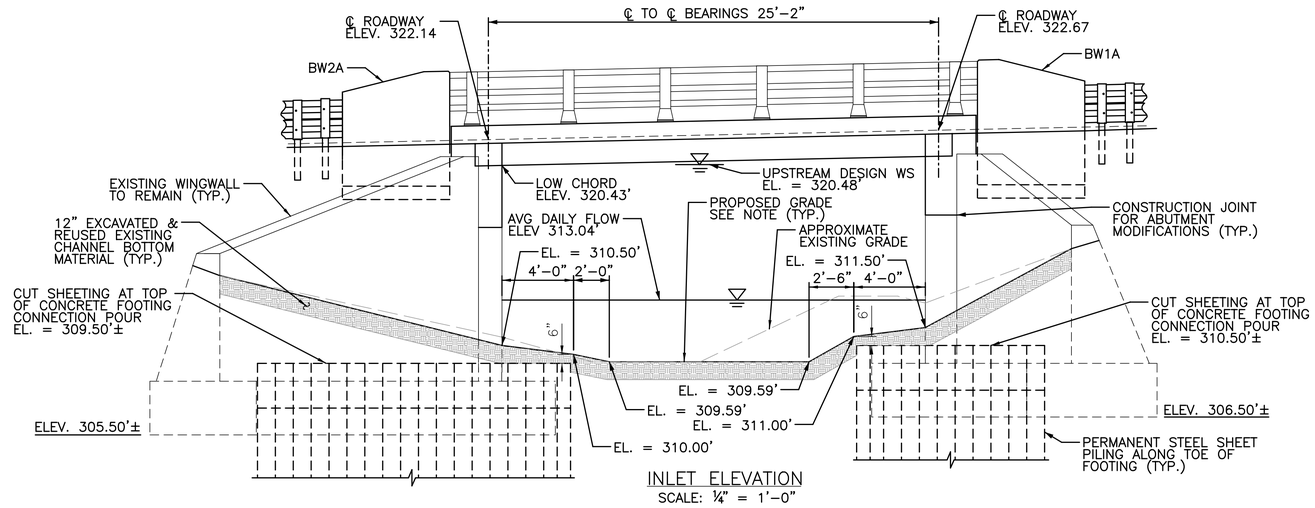

INLET ELEVATION
SCALE: 1/4" = 1'-0"

ESTIMATED QUANTITIES		
ITEM	UNIT	TOTAL
LEAD COMPLIANCE FOR MISCELLANEOUS EXTERIOR TASKS	LS	LS
EXCAVATION AND REUSE OF EXISTING CHANNEL BOTTOM MATERIAL	SY	190
STRUCTURE EXCAVATION–EARTH (EXCLUDING COFFERDAM AND DEWATERING)	CY	200
COFFERDAM AND DEWATERING	LF	250
HANDLING WATER	LS	LS
GRANULAR FILL	CY	5
PERVIOUS STRUCTURE BACKFILL	CY	60
HMA S0.5	TON	13
HMA S0.25	TON	9
MATERIAL FOR TACK COAT	GAL	25
TEMPORARY BRIDGE AND APPROACHES	LS	LS
REMOVAL OF SUPERSTRUCTURE	LS	LS
PERMANENT ANCHOR TIEBACK SYSTEM	EA	8
WELDED STUDS	EA	130
PRESTRESSED DECK UNITS (4'–0"x1'–3")	LF	187
ELASTOMERIC BEARING PADS	CI	2640
CLASS 'A' CONCRETE	CY	65
CLASS 'S' CONCRETE	CF	2
VARIABLE DEPTH PATCH	CF	11
CLASS 'F' CONCRETE	CY	16
DEFORMED STEEL BARS – EPOXY COATED	LB	7600
DRILLING HOLES AND GROUTING REINFORCING BARS	EA.	340
DISPOSAL OF LEAD DEBRIS	BBL	1
MEMBRANE WATERPROOFING (WOVEN GLASS FABRIC)	SY	95
DAMPPROOFING	SY	42
PERMANENT STEEL SHEET PILING	SF	4200
TEMPORARY EARTH RETAINING SYSTEM	SF	630
TEMPORARY PRECAST CONCRETE BARRIER CURB (STRUCTURE)	LF	80
RELOCATED TEMPORARY PRECAST CONCRETE BARRIER CURB (STRUCTURE)	LF	20
METAL BRIDGE RAIL (COMBINATION) (EXTRUDED POST ALUMINUM)	LF	59
REMOVAL OF EXISTING MASONRY	CY	25

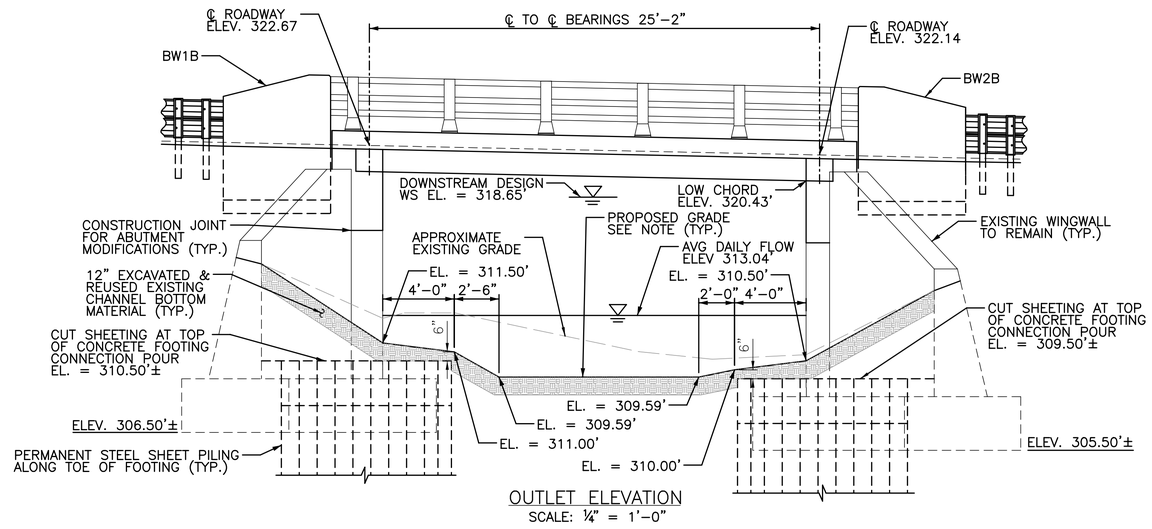

OUTLET ELEVATION
SCALE: 1/4" = 1'-0"

NOTE: PROPOSED CHANNEL BOTTOM ELEVATIONS APPLY AT THE OUTSIDE FACE OF THE PROPOSED SUPERSTRUCTURE. GRADE CHANNEL BOTTOM TO MATCH EXISTING ELEVATIONS AT LIMITS AS SHOWN ON WATERHANDLING PLANS, DRAWING NO.'S BRG–7 & BRG–8.

REV.	DATE	REVISION DESCRIPTION	SHEET NO.

Filename: BRG_2 – Layout.dgn Plotted: 6/30/2016

THE INFORMATION, INCLUDING ESTIMATED QUANTITIES OF WORK, SHOWN ON THESE SHEETS IS BASED ON LIMITED INVESTIGATIONS AND IS IN NO WAY WARRANTED TO INDICATE THE CONDITIONS OF ACTUAL QUANTITIES OF WORK WHICH WILL BE REQUIRED.

DESIGNER/DRAFTER: DEH
CHECKED BY: RRC
SCALE AS NOTED

TOWN OF ANDOVER
CONNECTICUT

CME
CME Associates, Inc.
333 East River Drive
East Hartford, CT 06108

PROJECT TITLE: REHABILITATION OF BRIDGE NO. 04581 TIMES FARM ROAD OVER THE HOP RIVER

TOWN: ANDOVER

DRAWING TITLE: LAYOUT, ELEVATIONS, AND QUANTITIES

PROJECT NO. 01–105
DRAWING NO. BRG–2
SHEET NO. 7

B–1

Mike St. John	APPLIED EARTH TECHNOLOGIES	SHEET 1 OF 1	
DRILLER	571 BEE STREET, MERIDEN CT 06450	BORING CONTRACTOR	
R. Beniwal	SOIL TEST BORING REPORT	New England Boring Contractors	
INSPECTOR	TOWN: Andover	SOIL ENGINEER	
Mobile B-54	PROJECT NAME: Times Farm Road Over Hop River	Applied Earth Technologies, Inc.	
BORING RIG & MAKE	PROJECT NUMBER: Bridge #04581	DESIGN ENGINEER	
Surface Elevation: 322.5	LOCATION: West Abutment	CME Associates, Inc.	
Date Started: 2/25/2004	Auger / Casing / Sampler / Core Bar	Hole No. **B-1**	
Date Finished: 2/25/2004	Type: NW / SS / NQ Double	Line & Station 13+54.4	
Groundwater Observations	Size I. D.: 3 in / 1 3/8 in / 2 1/8	Offset 4.5 LT	
AT 8.0' AFTER 0 HRS	Hammer: 300 lbs / 140 lbs / Dia Bit	N Coordinate 838110.13	
AT AFTER HRS	Fall: 24 in / 30 in	E. Coordinate 1096082.32	

DEPTH	CASING BLOWS PER FOOT	SAMPLE DEPTH IN FEET FROM - TO	NO.	PEN. INCH	REC. INCH	TYPE	BLOWS PER 6 INCHES ON SAMPLER 0 - 6	6 - 12	12-18	18-24	STRATA CHANGE: DEPTH/ ELEV.	FIELD IDENTIFICATION OF SOIL, REMARKS (INCL. COLOR, LOSS OF WASH WATER, ETC.)
		0.5-1.5	1	12	7	D	49	100			322.5	4" Asphalt Concrete Brown fine coarse SAND, and fine coarse gravel, little silt, fill. (Frost depth two plus feet)
5	12	5.0-7.0	2	24	8	D	3	3	4	5		
	16											
	19										8.0	
10	8											Brown SILT, some fine sand, occasional pieces of gravel, fill.
	5											
	7	10.0-12.0	3	24	10	D	1	1	1	2		
	10											
	12										13.0	
15	4											Cored concrete footing, Recovery = 36".
	4											
	4	16.0-18.0	4	24	24	D	2	5	15	41	16.0	
	14											Brown fine GRAVEL, some coarse sand.
	16										18.0	
20	21											Brown fine coarse SAND, and fine coarse gravel, Trace to little silt.
	20											
	20	20.0-22.0	5	24	16	D	10	12	12	13		
	23											
	30											
	37											
25	41										25.0	
	20	25.0-27.0	6	24	10	D	9	17	18	16		
	24											Brown fine coarse GRAVEL, some fine coarse sand, little silt.
	21											
	26										29.0	
30	40											Brown fine coarse SAND, and fine coarse gravel, little silt.
	21	30.0-32.0	7	24	12	D	8	10	10	12		
	25											
	30											
	36											
35	35											
	44	35.0-37.0	8	24	18	D	25	33	45	18		
	65											
	110										38.0	
		38.0-43.0	C1	60	53	C						Cored 38' to 43' , Run #1, Recovery =53". RQD=50.5%, Core time 4,4,3,4,4 min per ft
40											43	Gray f. grained schist & gneiss with mica.
												End of Boring at 43', Water at 8.0'.

13ft 4" NW casing was used. 3" NW casing was used below abutment footing to 38'

Footage in Earth 38.0 Footage in Rock 5.0 No. of Samples 8 Hole No. **B-1**

SAMPLE TYPE CODING: D = DRIVEN C = CORE A = AUGER UP = UNDISTURBED PISTON

PROPORTIONS USED: TRACE = 1-10% LITTLE = 10-20% SOME = 20-35% AND = 35-50%

B–2

Mike St. John	APPLIED EARTH TECHNOLOGIES	SHEET 1 OF 2	
DRILLER	571 BEE STREET, MERIDEN CT 06450	BORING CONTRACTOR	
R. Beniwal	SOIL TEST BORING REPORT	New England Boring Contractors	
INSPECTOR	TOWN: Andover	SOIL ENGINEER	
Mobile B-54	PROJECT NAME: Times Farm Road Over Hop River	Applied Earth Technologies, Inc.	
BORING RIG & MAKE	PROJECT NUMBER: Bridge #04581	DESIGN ENGINEER	
Surface Elevation: 323.17	LOCATION: West Abutment	CME Associates, Inc.	
Date Started: 2/24/2004	Auger / Casing / Sampler / Core Bar	Hole No. **B-2**	
Date Finished: 2/24/2004	Type: NW / SS / NQ Double	Line & Station 13+42.7	
Groundwater Observations	Size I. D.: 3 in / 1 3/8 in / 2 1/8	Offset 6.2 RT	
AT 8.0' AFTER 0 HRS	Hammer: 300 lbs / 140 lbs / Dia Bit	N Coordinate 838095.42	
AT AFTER HRS	Fall: 24 in / 30 in	E. Coordinate 1096076.47	

DEPTH	CASING BLOWS PER FOOT	SAMPLE DEPTH IN FEET FROM - TO	NO.	PEN. INCH	REC. INCH	TYPE	BLOWS PER 6 INCHES ON SAMPLER 0 - 6	6 - 12	12-18	18-24	STRATA CHANGE: DEPTH/ ELEV.	FIELD IDENTIFICATION OF SOIL, REMARKS (INCL. COLOR, LOSS OF WASH WATER, ETC.)
		0.5-2.5	1	24	14	D	50	58	63	40		4" Asphalt Concrete
											322.7	Brown fine coarse SAND, and to some fine medium gravel,trace to little silt fill. (Frost depth two plus feet)
5	10	5.0-7.0	2	24	15	D	4	5	5	5		
	13											
	12											
	11											
10	14											
	13	10.0-12.0	3	24	22	D	2	4	15	16	10.0	
	16										11.0	Dark brown organic fine SAND and silt
	30										312.2	Brown fine coarse SAND and fine coarse gravel, trace to little silt.
	32											
15	40											
	26	15.0-17.0	4	24	14	D	13	15	17	18		
	31											
	38											
	40											
20	43											
	24	20.0-22.0	5	24	18	D	12	14	18	21		
	28										22.0	
	38										301.2	
	42											
25	45											
	74	25.0-27.0	6	24	7	D	30	53	48	30		
	85											Brown fine coarse GRAVEL, and fine coarse sand, little silt.
	105											
	149											
30	186											
		30.0-32.0	7	24	10	D	22	23	16	25		
35												
		35.0-37.0	8	24	16	D	15	18	21	20		
40												

From Ground Surface to 40 ft 3" NW casing was used.

Footage in Earth 40.0 Footage in Rock 0.0 No. of Samples 8 Hole No. **B-2**

SAMPLE TYPE CODING: D = DRIVEN C = CORE A = AUGER UP = UNDISTURBED PISTON

PROPORTIONS USED: TRACE = 1-10% LITTLE = 10-20% SOME = 20-35% AND = 35-50%

B–3

Mike St. John	APPLIED EARTH TECHNOLOGIES	SHEET 1 OF 2	
DRILLER	571 BEE STREET, MERIDEN CT 06450	BORING CONTRACTOR	
R. Beniwal	SOIL TEST BORING REPORT	New England Boring Contractors	
INSPECTOR	TOWN: Andover	SOIL ENGINEER	
Mobile B-54	PROJECT NAME: Times Farm Road Over Hop River	Applied Earth Technologies, Inc.	
BORING RIG & MAKE	PROJECT NUMBER: Bridge #04581	DESIGN ENGINEER	
Surface Elevation: 321.67	LOCATION: East Abutment	CME Associates, Inc.	
Date Started: 2/26/2004	Auger / Casing / Sampler / Core Bar	Hole No. **B-3**	
Date Finished: 2/26/2004	Type: HW / SS / NQ Double	Line & Station 14+1.0	
Groundwater Observations	Size I. D.: 4 in / 1 3/8 in / 2 1/8	Offset 5.8 RT	
AT 8.0' AFTER 0 HRS	Hammer: 300 lbs / 140 lbs / Dia Bit	N Coordinate 838131.69	
AT AFTER HRS	Fall: 24 in / 30 in	E. Coordinate 1096123.66	

DEPTH	CASING BLOWS PER FOOT	SAMPLE DEPTH IN FEET FROM - TO	NO.	PEN. INCH	REC. INCH	TYPE	BLOWS PER 6 INCHES ON SAMPLER 0 - 6	6 - 12	12-18	18-24	STRATA CHANGE: DEPTH/ ELEV.	FIELD IDENTIFICATION OF SOIL, REMARKS (INCL. COLOR, LOSS OF WASH WATER, ETC.)
		0.5-2.5	1	24	14	D	45	60	51	30		4" Asphalt Concrete
											321.3	Brown fine coarse SAND, little fine coarse gravel, little silt, Fill?, Frozen to a depth of two feet.
5	16	5.0-7.0	2	24	8	D	18	19	100/2			Occassional cobbles and boulders at 10'
	19											
	22											
	27											
10	30											
	25	10.0-12.0	3	24	4	D	7	7	6	8		
	30											
	31										13.0	
	41										308.7	
15	40											
	29	15.0-17.0	4	24	6	D	6	8	4	22		Brown fine coarse SAND and fine coarse gravel, trace to little silt.
	33											
	38											
	45											
20	44											
	56	20.0-22.0	5	24	7	D	17	21	22	24		
	68											
	75											
	82											
25	80											
	55	25.0-27.0	6	24	14	D	13	13	15	14		
	65											
	69											
	69											
30	82											
	65	30.0-32.0	7	24	17	D	15	16	23	17		
	67											
	75											
	75											
35	89										35.0	
	50	35.0-37.0	8	24	20	D	7	7	10	13	286.7	Brown SILT some fine sand
	48											
	61											
	64											
40	60											

From Ground Surface to 40.0' 4" HW casing was used.

Footage in Earth 40.0 Footage in Rock 0.0 No. of Samples 8 Hole No. **B-3**

SAMPLE TYPE CODING: D = DRIVEN C = CORE A = AUGER UP = UNDISTURBED PISTON

PROPORTIONS USED: TRACE = 1-10% LITTLE = 10-20% SOME = 20-35% AND = 35-50%

B–4

Mike St. John	APPLIED EARTH TECHNOLOGIES	SHEET 1 OF 1	
DRILLER	571 BEE STREET, MERIDEN CT 06450	BORING CONTRACTOR	
R. Beniwal	SOIL TEST BORING REPORT	New England Boring Contractors	
INSPECTOR	TOWN: Andover	SOIL ENGINEER	
Mobile B-54	PROJECT NAME: Times Farm Road Over Hop River	Applied Earth Technologies, Inc.	
BORING RIG & MAKE	PROJECT NUMBER: Bridge #04581	DESIGN ENGINEER	
Surface Elevation: 322.01	LOCATION: East Abutment	CME Associates, Inc.	
Date Started: 2/23/2004	Auger / Casing / Sampler / Core Bar	Hole No. **B-4**	
Date Finished: 2/23/2004	Type: NW / SS / NQ Double	Line & Station 13+88.9	
Groundwater Observations	Size I. D.: 3 in / 1 3/8 in / 2 1/8	Offset 6.08 RT	
AT 7.5' AFTER 0 HRS	Hammer: 300 lbs / 140 lbs / Dia Bit	N Coordinate 838115.73	
AT AFTER HRS	Fall: 24 in / 30 in	E. Coordinate 1096118.04	

DEPTH	CASING BLOWS PER FOOT	SAMPLE DEPTH IN FEET FROM - TO	NO.	PEN. INCH	REC. INCH	TYPE	BLOWS PER 6 INCHES ON SAMPLER 0 - 6	6 - 12	12-18	18-24	STRATA CHANGE: DEPTH/ ELEV.*	FIELD IDENTIFICATION OF SOIL, REMARKS (INCL. COLOR, LOSS OF WASH WATER, ETC.)
		0.5-2.5	1	24	14	D	65	72	69	51		3" Asphalt Concrete
											4.0	Brown fine coarse SAND and fine coarse gravel, trace silt, Fill?, Frozen to a depth of two feet.
5	14	5.0-7.0	2	24	12	D	2	2	2	4	318.0	
	26											Brown fine coarse SAND some fine coarse gravel, little silt.
	31											
	48											
10	55											
	62	10.0-12.0	3	24	7	D	9	10	12	10		
	73											
	80										13.5	
15												
											16.5	Concrete Footing, cored 3 feet, recovery 30 inches. Fairly good condition
												Brown fine coarse GRAVEL and fine coarse sand.
											18.5	
	18.5-20.5	4	24	14	D	10	32	24	15			
20											20.5	Brown fine coarse SAND, some fine medium gravel, trace silt.
	40											
	42										301.5	
	48											Brown fine coarse SAND and fine coarse gravel, little silt.
	55											
25	61											
	48	25.0-27.0	5	24	14	D	20	16	15	13		
	58										27.0	
	81										295.0	Brown fine coarse GRAVEL and fine coarse sand, little silt.
	80											
30	86											
	80	30.0-32.0	6	24	10	D	11	13	13	15		
	85											
	97											
	112											
35	145										35.0	
		35.0-37.0	7	24	9	D	12	12	13	16	287.0	Brown fine coarse SAND some fine coarse gravel, trace to little silt.
40												
		40.0-42.0	8	24	10	D	12	14	13	15		
											42.00	End of boring at 42.0 ft, water 7.5'.

From Ground Surface to 13.5 ft 4" HW casing was used, 3" NW casing was used below footing. * Higher number elevation

Footage in Earth 42.0 Footage in Rock 0.0 No. of Samples 8 Hole No. **B-4**

SAMPLE TYPE CODING: D = DRIVEN C = CORE A = AUGER UP = UNDISTURBED PISTON

PROPORTIONS USED: TRACE = 1-10% LITTLE = 10-20% SOME = 20-35% AND = 35-50%

B–2

Mike St. John	APPLIED EARTH TECHNOLOGIES	SHEET 2 OF 2	
DRILLER	571 BEE STREET, MERIDEN CT 06450	BORING CONTRACTOR	
R. Beniwal	SOIL TEST BORING REPORT	New England Boring Contractors	
INSPECTOR	TOWN: Andover	SOIL ENGINEER	
Mobile B-54	PROJECT NAME: Times Farm Road Over Hop River	Applied Earth Technologies, Inc.	
BORING RIG & MAKE	PROJECT NUMBER: Bridge #04581	DESIGN ENGINEER	
Surface Elevation: 323.17	LOCATION: West Abutment	CME Associates, Inc.	
Date Started: 2/24/2004	Auger / Casing / Sampler / Core Bar	Hole No. **B-2**	
Date Finished: 2/24/2004	Type: NW / SS / NQ Double	Line & Station 13+42.7	
Groundwater Observations	Size I. D.: 3 in / 1 3/8 in / 2 1/8	Offset 6.2 RT	
AT 8.0' AFTER 0 HRS	Hammer: 300 lbs / 140 lbs / Dia Bit	N Coordinate 838095.42	
AT AFTER HRS	Fall: 24 in / 30 in	E. Coordinate 1096076.47	

DEPTH	CORING TIME IN MINUTES PER FOOT	SAMPLE DEPTH IN FEET FROM - TO	NO.	PEN. INCH	REC. INCH	TYPE	BLOWS PER 6 INCHES ON SAMPLER 0 - 6	6 - 12	12-18	18-24	STRATA CHANGE: DEPTH/ ELEV.	FIELD IDENTIFICATION OF SOIL, REMARKS (INCL. COLOR, LOSS OF WASH WATER, ETC.)
		40.0-40.2	9	2	2	D	120/2					Brown fine coarse GRAVEL and fine
	4	41.0-46.0	C1	60	46	C					42.0	coarse sand, little silt. One ft boulder at 41'
	4										281.2	Cored 41.0 to 46.0, Run #1
	3											Recovery=95.8%, RQD= 41%, Dark gray
45	4											fine grained schist and gneiss interlayer.
	4										46.0	
											277.2	End of boring at 46', water at 8'.
50												
55												
60												
65												
70												
75												
80												

From Ground Surface to 30' 3" NW casing was used.

Footage in Earth 41.0 Footage in Rock 5.0' No. of Samples 9 Hole No. **B-2**

SAMPLE TYPE CODING: D = DRIVEN C = CORE A = AUGER UP = UNDISTURBED PISTON

PROPORTIONS USED: TRACE = 1-10% LITTLE = 10-20% SOME = 20-35% AND = 35-50%

B–3

Mike St. John	APPLIED EARTH TECHNOLOGIES	SHEET 2 OF 2	
DRILLER	571 BEE STREET, MERIDEN CT 06450	BORING CONTRACTOR	
R. Beniwal	SOIL TEST BORING REPORT	New England Boring Contractors	
INSPECTOR	TOWN: Andover	SOIL ENGINEER	
Mobile B-54	PROJECT NAME: Times Farm Road Over Hop River	Applied Earth Technologies, Inc.	
BORING RIG & MAKE	PROJECT NUMBER: Bridge #04581	DESIGN ENGINEER	
Surface Elevation: 321.67	LOCATION: East Abutment	CME Associates, Inc.	
Date Started: 2/26/2004	Auger / Casing / Sampler / Core Bar	Hole No. **B-3**	
Date Finished: 2/26/2004	Type: NW / SS / NQ Double	Line & Station 14+1.0	
Groundwater Observations	Size I. D.: 4 in / 1 3/8 in / 2 1/8	Offset 5.8 RT	
AT 8.0' AFTER 0 HRS	Hammer: 300 lbs / 140 lb / Dia Bit	N Coordinate 838131.69	
AT AFTER HRS	Fall: 24 in / 30 in	E. Coordinate 1096123.66	

DEPTH	CORING TIME IN MINUTES PER FOOT	SAMPLE DEPTH IN FEET FROM - TO	NO.	PEN. INCH	REC. INCH	TYPE	BLOWS PER 6 INCHES ON SAMPLER 0 - 6	6 - 12	12-18	18-24	STRATA CHANGE: DEPTH/ ELEV.	FIELD IDENTIFICATION OF SOIL, REMARKS (INCL. COLOR, LOSS OF WASH WATER, ETC.)
		40.0-40.0	9	0	0	D	100/0				41.0	
	4	41.0-46.0	C1	60	60	C					280.7	
	4											Cored 41.0 to 46.0 , Run #1,
	4											Recovery=100, RQD=83.8%. Gray fine
45	5											grained schist & gneiss interlayer.
	5										46.0	
											275.7	End of boring at 46', water at 8'.
50												
55												
60												
65												
70												
75												
80												

From Ground Surface to 40' 4" HW casing was used.

Footage in Earth 1.0 Footage in Rock 5.0' No. of Samples 0 Hole No. **B-3**

SAMPLE TYPE CODING: D = DRIVEN C = CORE A = AUGER UP = UNDISTURBED PISTON

PROPORTIONS USED: TRACE = 1-10% LITTLE = 10-20% SOME = 20-35% AND = 35-50%

REV.	DATE	REVISION DESCRIPTION	SHEET NO.

Filename: BRG_3– Borings.dgn Plotted: 6/30/2016

DESIGNER/DRAFTER: DEH

CHECKED BY: RRC

TOWN OF ANDOVER

CONNECTICUT

CME

CME Associates, Inc.
333 East River Drive
East Hartford, CT 06108

PROJECT TITLE:
REHABILITATION OF BRIDGE NO. 04581
TIMES FARM ROAD OVER
THE HOP RIVER

TOWN: ANDOVER

DRAWING TITLE: BORING LOGS

PROJECT NO. 01–105

DRAWING NO. BRG–3

SHEET NO. 8

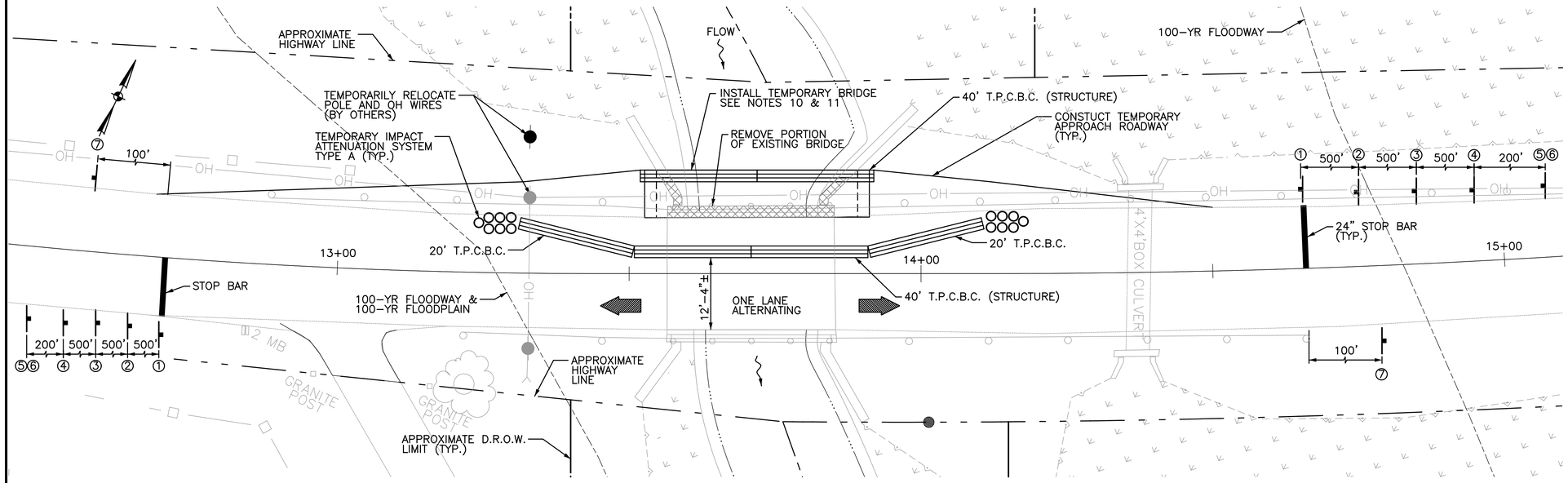

PLAN VIEW – STAGE 1

SCALE: 1" = 10'-0"

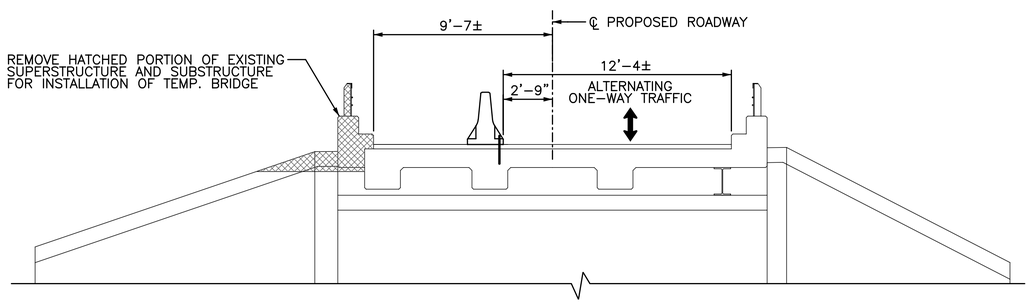

EXISTING CROSS SECTION – STAGE 1

SCALE: ¼" = 1'-0"

NOTE: ABUTMENT 2 SHOWN, ABUTMENT 1 SIMILAR

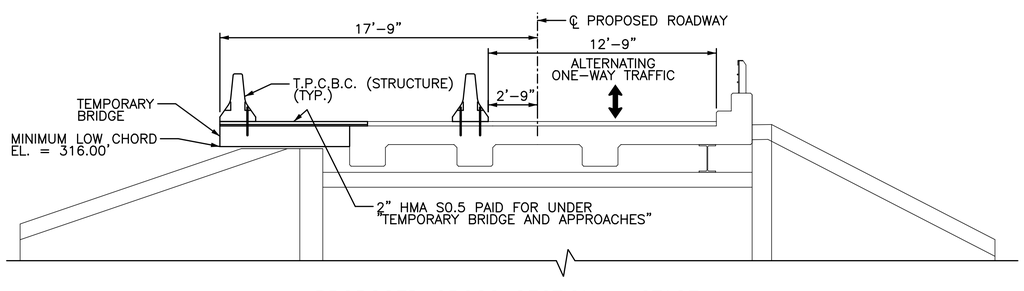

PROPOSED CROSS SECTION – STAGE 1

SCALE: ¼" = 1'-0"

NOTE: ABUTMENT 2 SHOWN, ABUTMENT 1 SIMILAR

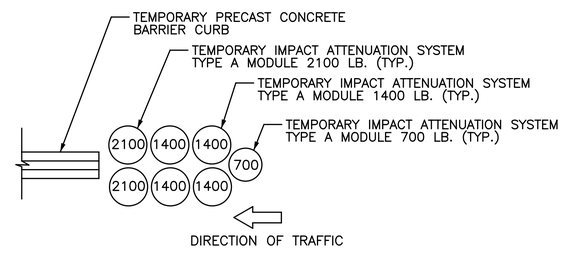

SCHEMATIC PLAN – TEMPORARY IMPACT ATTENUATION SYSTEM TYPE A

N.T.S.

NOTES:

1. THE APPROPRIATE TYPE DE-7C DELINEATORS SHALL BE INSTALLED ON THE TPCBC AS SPECIFIED ON THE TRAFFIC STANDARD SHEET TR-1205-01 "DELINEATION, DELINEATORS AND OBJECT MARKER DETAILS.
2. EXISTING SIGNS IN CONFLICT WITH TEMPORARY SIGNS SHALL BE COVERED, REMOVED OR REVISED TO MEET FIELD CONDITIONS.
3. THE LOCATIONS OF TEMPORARY SIGNS SHOWN ON THE PLANS ARE APPROXIMATE AND SHALL BE ADJUSTED BY THE CONTRACTOR TO MEET FIELD CONDITIONS.
4. TEMPORARY SIGNS SHALL BE MOUNTED ON POSTS WHEN FEASIBLE.
5. THE DISTANCES BETWEEN SIGNS ARE NOT TO SCALE.
6. AN ADDITIONAL SET OF SIGNS 2-6 SHALL BE PLACED ON OLD COVENTRY ROAD FOR MOTORISTS TRAVELING SOUTHBOUND.
7. THE COST OF THE TEMPORARY SIGNS SHALL BE PAID FOR UNDER THE ITEM "CONSTRUCTION SIGNS".
8. THE COST OF THE TEMPORARY 24" STOP BARS SHALL BE PAID FOR UNDER THE ITEM "TEMPORARY PLASTIC PAVEMENT MARKING TAPE – 12" WHITE".
9. A DEBRIS SHIELD SHALL BE INSTALLED DURING THE REMOVAL OF THE EXISTING SUPERSTRUCTURE AND SHALL NOT EXTEND BELOW EL. = 316.00'. THE DEBRIS SHIELD SHALL BE INCLUDED IN THE COST OF THE ITEM "REMOVAL OF SUPERSTUCTURE".
10. THE CONTRACTOR SHALL DESIGN THE TEMPORARY BRIDGE AND TEMPORARY ABUTMENTS AS REQUIRED IN STAGE 1. THE CONTRACTOR SHALL SUBMIT PLANS AND CALCULATIONS TO THE ENGINEER FOR REVIEW. THE COST FOR THIS WORK SHALL BE PAID FOR UNDER THE ITEM "TEMPORARY BRIDGE AND APPROACHES".
11. THE CONTACTOR SHALL BE RESPONSIBLE FOR MAINTAINING THE BITUMINOUS CONCRETE ON THE TEMPORARY BRIDGE AND APPROACH ROADWAYS THROUGHOUT CONSTRUCTION.
12. CONTRACTOR IS RESPONSIBLE TO COORDINATE TEMPORARY UTILITY POLE RELOCATIONS. SEE NOTICE TO CONTRACTOR – UTILITY RELOCATIONS.

STAGE 1 CONSTRUCTION SEQUENCE:

1. RELOCATE POLE AND OVERHEAD WIRES OUTSIDE OF ROADWAY.
2. INSTALL TEMPORARY PRECAST CONCRETE BARRIER CURB, TEMPORARY IMPACT ATTENUATION SYSTEMS, AND CONSTRUCTION SIGNS.
3. START ONE WAY ALTERNATING TRAFFIC PATTERN ALLOWING TRAFFIC ON THE SOUTH SIDE OF THE BRIDGE.
4. INSTALL DEBRIS SHIELD AND REMOVE PORTION OF EXISTING SUPERSTRUCTURE AND SUBSTRUCTURE TO ALLOW INSTALLATION OF TEMPORARY BRIDGE.
5. INSTALL TEMPORARY BRIDGE, TEMPORARY BARRIERS AND CONSTRUCT TEMPORARY WIDENING TO PROVIDE ADEQUATE ROADWAY WIDTH AT THE APPROACHES.

SIGN LEGEND

SIGN	CONNDOT NO.	SIGN DESC.	NO. REQ'D	BARRICADE WARNING LIGHT
①	31-0557	STOP	2	NO
②	80-9051		2	YES
③	80-9834	ONE LANE ROAD AHEAD	3	YES
④	80-9603	ROAD WORK AHEAD	3	YES
⑤	31-1906	ROAD WORK AHEAD FINES DOUBLED	3	NO
⑥	80-1613	CONSTRUCTION AHEAD ROAD USE RESTRICTED STATE LIABILITY LIMITED GENERAL STATUTES SEC 13a-113, 13a-149 COMMISSIONER OF TRANSPORTATION	3	NO
⑦	80-9612	END ROAD WORK	2	NO

REV.	DATE	REVISION DESCRIPTION	SHEET NO.

Filename: BRG_4 – Stage Const.dgn Plotted: 6/30/2016

DESIGNER/DRAFTER: DEH
CHECKED BY: RRC
SCALE AS NOTED

TOWN OF ANDOVER
CONNECTICUT

CME
CME Associates, Inc.
333 East River Drive
East Hartford, CT 06108

PROJECT TITLE:
REHABILITATION OF BRIDGE NO. 04581
TIMES FARM ROAD OVER
THE HOP RIVER

TOWN: ANDOVER

DRAWING TITLE: STAGE 1 CONSTRUCTION

PROJECT NO. 01-105
DRAWING NO. BRG-4
SHEET NO. 9

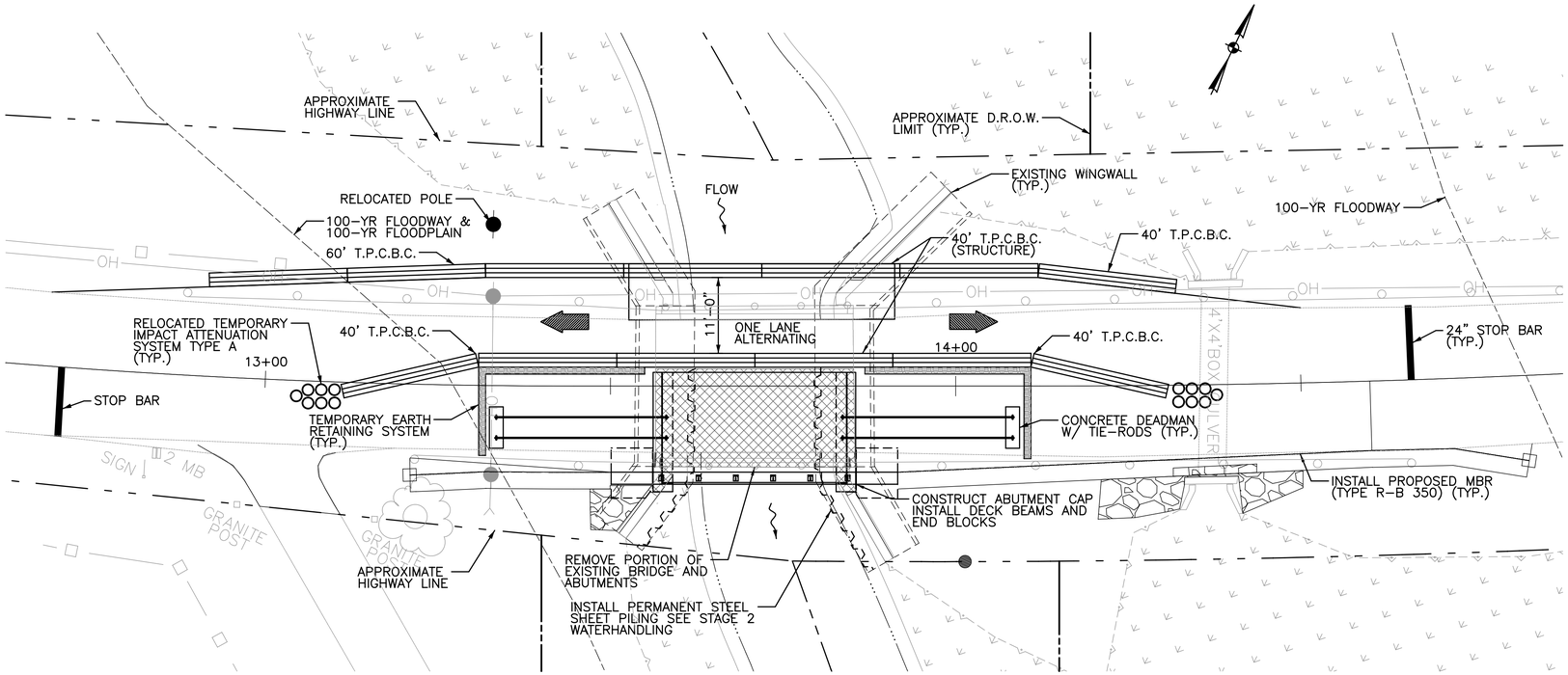

PLAN VIEW – STAGE 2

SCALE: 1" = 10'-0"

NOTES:

1. SEE BRG-4 FOR CONSTRUCTION SIGN LOCATIONS AND QUANTITIES.
2. AT STAGE CONSTRUCTION JOINT ALL LONGITUDINAL BARS SHALL BE MADE CONTINOUS WITH DOWEL BAR SPLICERS (DBS). DOWEL BAR SPLICERS SHALL BE EPOXY COATED AND BE INCLUDED IN THE COST OF THE ITEM "DEFORMED STEEL BARS (EPOXY COATED).
3. A DEBRIS SHIELD SHALL BE INSTALLED DURING THE REMOVAL OF THE EXISTING SUPERSTRUCTURE AND SHALL NOT EXTEND BELOW EL. = 316.00'. THE DEBRIS SHIELD SHALL BE INCLUDED IN THE COST OF THE ITEM "REMOVAL OF SUPERSTUCTURE".
4. THE CHEEKWALLS ON THE SOUTHERN SIDE OF THE PROPOSED ABUTMENT CAP WILL NEED TO BE CONSTRUCTED DURING STAGE 3 AFTER ALL POST-TENSIONING HAS OCCURED.

STAGE 2 CONSTRUCTION SEQUENCE:

1. ESTABLISH STAGE 2 MAINTENANCE AND PROTECTION OF TRAFFIC, SHIFTING TRAFFIC TO NORTHERN SIDE ONTO THE TEMPORARY BRIDGE.
2. INSTALL DEBRIS SHIELDING.
3. SAWCUT BRIDGE ALONG SAWCUT LINE AND REMOVE PORTION OF EXISTING SUPERSTRUCTURE.
4. INSTALL TEMPORARY EARTH RETAINING SYSTEMS.
5. EXCAVATE BEHIND ABUTMENT, SAWCUT AND REMOVE PORTION OF SUBSTRUCTURE TO THE LIMITS SHOWN ON THE PLANS.
6. INSTALL PERMANENT STEEL SHEET PILING TO THE LIMITS SHOWN ON STAGE 2 WATERHANDLING SHEET.
7. CONSTRUCT PROPOSED ABUTMENT CAPS, DEADMAN AND INSTALL TIE-RODS.
8. BACKFILL AND CONSTRUCT SUPERSTRUCTURE, BARRIER WALLS, AND APPROACH ROADWAY, INCLUDING EMBANKMENTS AND GUIDE RAILS.

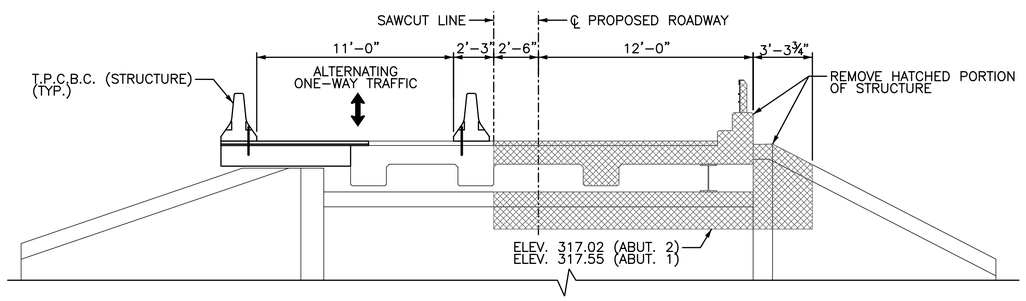

CROSS SECTION – STAGE 2 DEMOLITION

SCALE:¼" = 1'-0"

NOTE: ABUTMENT 2 SHOWN, ABUTMENT 1 SIMILAR

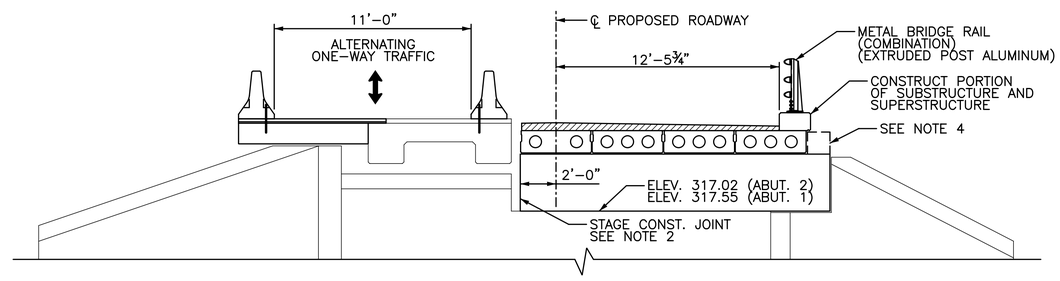

CROSS SECTION – STAGE 2 CONSTRUCTION

SCALE:¼" = 1'-0"

NOTE: ABUTMENT 2 SHOWN, ABUTMENT 1 SIMILAR

REV.	DATE	REVISION DESCRIPTION	SHEET NO.

Filename: BRG_4 – Stage Const.dgn Plotted: 6/30/2016

DESIGNER/DRAFTER: DEH
CHECKED BY: RRC
SCALE AS NOTED

TOWN OF ANDOVER
CONNECTICUT

CME
CME Associates, Inc.
333 East River Drive
East Hartford, CT 06108

PROJECT TITLE: REHABILITATION OF BRIDGE NO. 04581 TIMES FARM ROAD OVER THE HOP RIVER

TOWN: ANDOVER

DRAWING TITLE: STAGE 2 CONSTRUCTION

PROJECT NO. 01-105
DRAWING NO. BRG-5
SHEET NO. 10

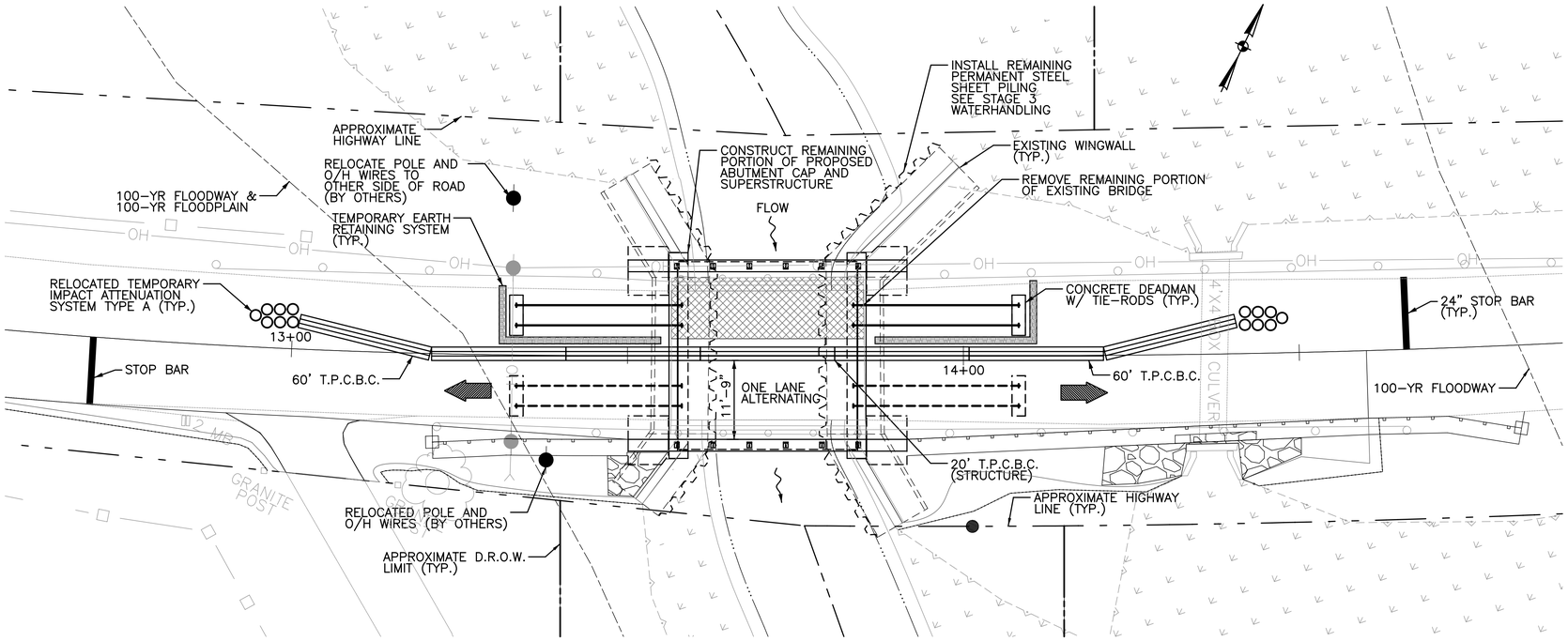

PLAN VIEW – STAGE 3

SCALE: 1" = 10'-0"

NOTES:

1. SEE BRG-4 FOR CONSTRUCTION SIGN LOCATIONS AND QUANTITIES.
2. AT STAGE CONSTRUCTION JOINT ALL LONGITUDINAL BARS SHALL BE MADE CONTINOUS WITH DOWEL BAR SPLICERS (DBS). DOWEL BAR SPLICERS SHALL BE EPOXY COATED AND BE INCLUDED IN THE COST OF THE ITEM "DEFORMED STEEL BARS (EPOXY COATED).
3. CONTRACTOR IS RESPONSIBLE TO COORDINATE TEMPORARY UTILITY POLE RELOCATIONS. SEE NOTICE TO CONTRACTOR – UTILITY RELOCATIONS.

STAGE 3 CONSTRUCTION SEQUENCE:

1. ESTABLISH STAGE 3 MAINTENCE AND PROTECTION OF TRAFFIC, SHIFTING ALTERNATING ONE-WAY TRAFFIC TO SOUTH SIDE OF BRIDGE.
2. RELOCATE POLE AND OVERHEAD WIRES TO SOUTHERN SIDE OF ROADWAY.
3. INSTALL TEMPORARY EARTH RETAINING SYSTEM.
4. REMOVE REMAINING SUPERSTRUCTURE AND SUBSTRUCTURE TO LIMITS SHOWN ON THE PLANS.
5. INSTALL REMAINING PERMANENT STEEL SHEET PILING. SEE STAGE 3 WATERHANDLING.
6. CONSTRUCT NORTH PORTION OF ABUTMENT CAP AND DEADMAN AND INSTALL TIE-RODS.
7. BACKFILL AND CONSTRUCT SUPERSTRUCTURE, BARRIER WALL AND APPROACH ROADWAY INCLUDING EMBANKMENTS AND GUIDE RAILS.
8. RELOCATE POLE AND OVERHEAD WIRES TO FINAL LOCATION.
9. REMOVE TEMPORARY TRAFFIC DEVICES, SIGNAGE AND END ONE-WAY TRAFFIC PATTERN.

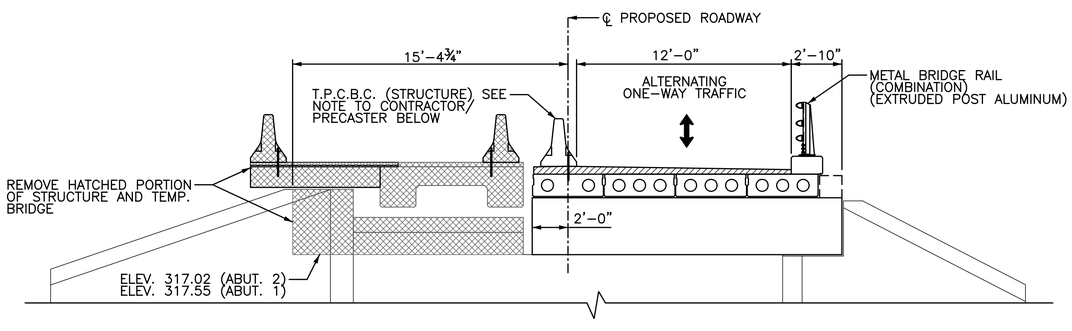

CROSS SECTION – STAGE 3 DEMOLITION

SCALE:¼" = 1'-0"

NOTE: ABUTMENT 2 SHOWN, ABUTMENT 1 SIMILAR

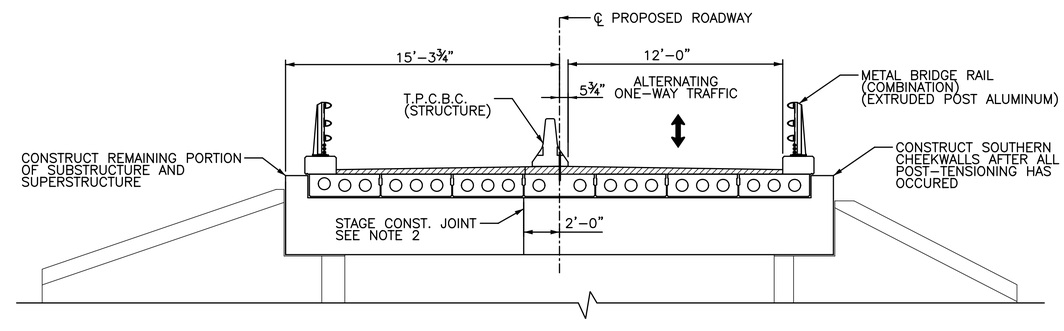

CROSS SECTION – STAGE 3 CONSTRUCTION

SCALE:¼" = 1'-0"

NOTE: ABUTMENT 2 SHOWN, ABUTMENT 1 SIMILAR

NOTE TO CONTRACTOR/PRECASTER:

THE CONTRACTOR SHALL COORDINATE WITH THE PRECAST FABRICATOR THE LOCATIONS OF HOLES/INSERTS FOR CONNECTING THE TEMPORARY PRECAST CONCRETE BARRIER TO PRESTRESSED DECK UNITS. UPON COMPLETING THE WORK, THE HOLES IN THE PRECAST MEMBERS SHALL BE FILLED WITH NON-SHRINK GROUT AND THE MEMBRANE WATERPROOFING PATCHED.

REV.	DATE	REVISION DESCRIPTION	SHEET NO.

Filename: BRG_4 – Stage Const.dgn Plotted: 6/30/2016

DESIGNER/DRAFTER: DEH
CHECKED BY: RRC
SCALE AS NOTED

TOWN OF ANDOVER
CONNECTICUT

CME
CME Associates, Inc.
333 East River Drive
East Hartford, CT 06108

PROJECT TITLE:
REHABILITATION OF BRIDGE NO. 04581
TIMES FARM ROAD OVER
THE HOP RIVER

TOWN: ANDOVER

DRAWING TITLE: STAGE 3 CONSTRUCTION

PROJECT NO. 01-105
DRAWING NO. BRG-6
SHEET NO. 11

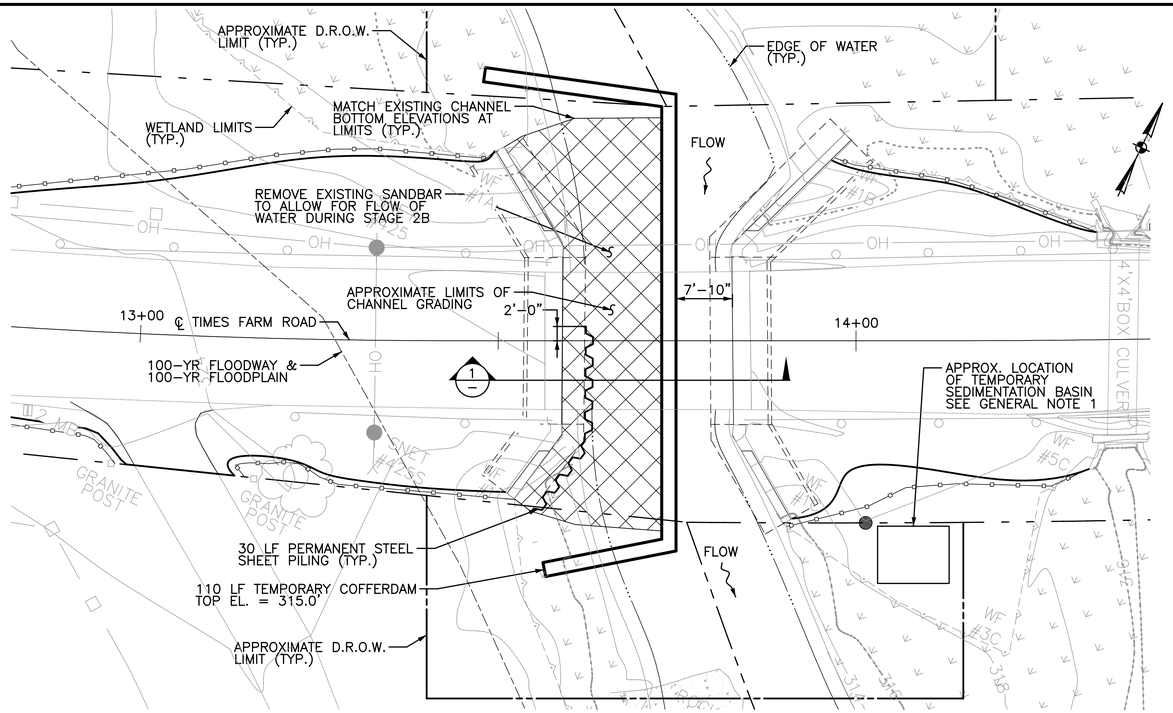

STAGE 2A WATERHANDLING PLAN

SCALE: 1" = 10'-0"

STAGE 2A TEMPORARY FACILITIES HYDRAULIC DATA	
AVERAGE DAILY FLOW (CFS)	21
AVERAGE SPRING FLOW (CFS)	42
2-YR FREQUENCY DISCHARGE (CFS)	480
TEMPORARY DESIGN DISCHARGE (CFS)	84
TEMPORARY DESIGN FREQUENCY	2x AVG. SPRING
TEMPORARY UPSTREAM WATER SURFACE EL. (FT)	314.22
TEMPORARY DOWNSTREAM WATER SURFACE EL. (FT)	314.05

STAGE 2B TEMPORARY FACILITIES HYDRAULIC DATA	
AVERAGE DAILY FLOW (CFS)	21
AVERAGE SPRING FLOW (CFS)	42
2-YR FREQUENCY DISCHARGE (CFS)	480
TEMPORARY DESIGN DISCHARGE (CFS)	84
TEMPORARY DESIGN FREQUENCY	2x AVG. SPRING
TEMPORARY UPSTREAM WATER SURFACE EL. (FT)	314.74
TEMPORARY DOWNSTREAM WATER SURFACE EL. (FT)	314.69

GENERAL NOTES:

1. ALL WATER PUMPED FROM WITHIN THE COFFERDAM TO BE HANDLED THROUGH THE TEMPORARY SEDIMENTATION BASIN. THE TEMPORARY SEDIMENTATION BASIN AND PUMP(S) SHALL BE SIZED BY THE CONTRACTOR AND SUBMITTED TO THE ENGINEER FOR APPROVAL. COST OF TEMPORARY SEDIMENTATION BASIN SHALL BE INCLUDED IN THE COST OF ITEM "COFFERDAM AND DEWATERING".
2. CONTRACTOR SHALL CLEAR DEBRIS AND ICE BUILD-UP AS REQUIRED TO MAINTAIN FLOW OF HOP BROOK THROUGH ALL STAGES OF CONSTRUCTION.

HANDLING WATER NOTES:

1. THE COFFERDAM SHALL BE DESIGNED BY THE CONTRACTOR BASED ON THE SELECTED METHOD OF HANDLING WATER.

SUGGESTED STAGE 2 SEQUENCE:

STAGE 2A

1. SEE STAGE 2 CONSTRUCTION SEQUENCE FOR PREVIOUS STEPS.
2. INSTALL STAGE 2A TEMPORARY COFFERDAM TO THE LIMITS SHOWN ON THE PLANS AND DEWATER AREA BETWEEN ABUTMENT 1 AND TEMPORARY COFFERDAM.
3. EXCAVATE CHANNEL BOTTOM AND REMOVE EXISTING SANDBAR TO ALLOW FOR THE FLOW OF WATER DURING STAGE 2B WATERHANDLING AND AS REQUIRED TO INSTALL PERMANENT STEEL SHEET PILING AND CONSTRUCT SHEET PILING CONNECTION AS SHOWN ON BRG-11. STOCKPILE EXISTING CHANNEL BOTTOM MATERIAL FOR RE-USE.
4. DRIVE SHEET PILING, INSTALL SHEAR STUDS, DRILL AND GROUT REINFORCING BARS, AND POUR CONCRETE CONNECTION. CUT SHEET PILING AT TOP OF CONCRETE POUR AND RE-PLACE EXISTING CHANNEL BOTTOM MATERIAL.
5. GRADE CHANNEL BOTTOM TO PROPOSED GRADES WITHIN THE LIMITS SHOWN ON THE PLANS. MATCH EXISTING CHANNEL BOTTOM ELEVATIONS AT THE LIMITS SHOWN.
6. REMOVE STAGE 2A COFFERDAM.

STAGE 2B

1. INSTALL STAGE 2B TEMPORARY COFFERDAM TO THE LIMITS SHOWN ON THE PLANS AND DEWATER AREA BETWEEN ABUTMENT 2 AND TEMPORARY COFFERDAM.
3. EXCAVATE CHANNEL BOTTOM AS REQUIRED TO INSTALL PERMANENT STEEL SHEET PILING AND CONSTRUCT SHEET PILING CONNECTION AS SHOWN ON BRG-11. STOCKPILE EXISTING CHANNEL BOTTOM MATERIAL FOR RE-USE.
4. DRIVE SHEET PILING, INSTALL SHEAR STUDS, DRILL AND GROUT REINFORCING BARS, AND POUR CONCRETE CONNECTION. CUT SHEET PILING AT TOP OF CONCRETE POUR AND RE-PLACE EXISTING CHANNEL BOTTOM MATERIAL.
5. GRADE CHANNEL BOTTOM TO PROPOSED GRADES WITHIN THE LIMITS SHOWN ON THE PLANS. MATCH EXISTING CHANNEL BOTTOM ELEVATIONS AT THE LIMITS SHOWN.
6. STAGE 2B COFFERDAM TO REMAIN IN PLACE TO BE USED IN STAGE 3A.

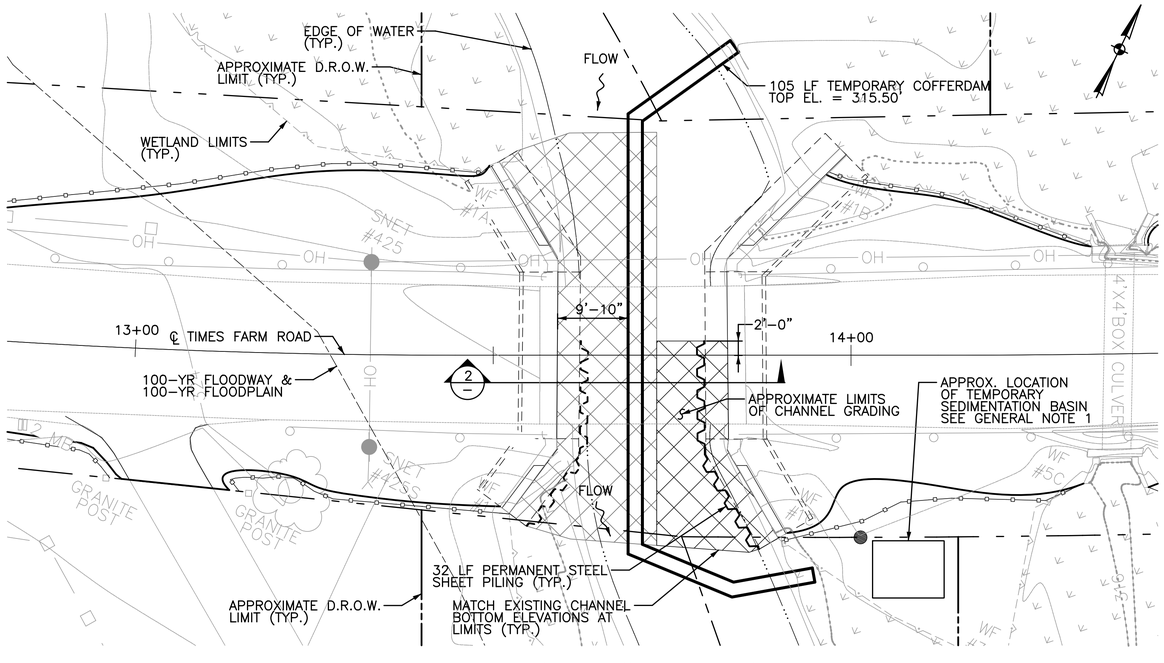

STAGE 2B WATERHANDLING PLAN

SCALE: 1" = 10'-0"

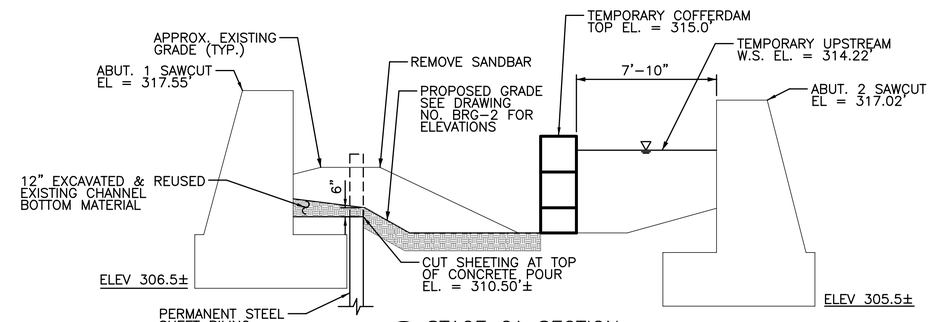

1 STAGE 2A SECTION

SCALE: ¼" = 1'-0"

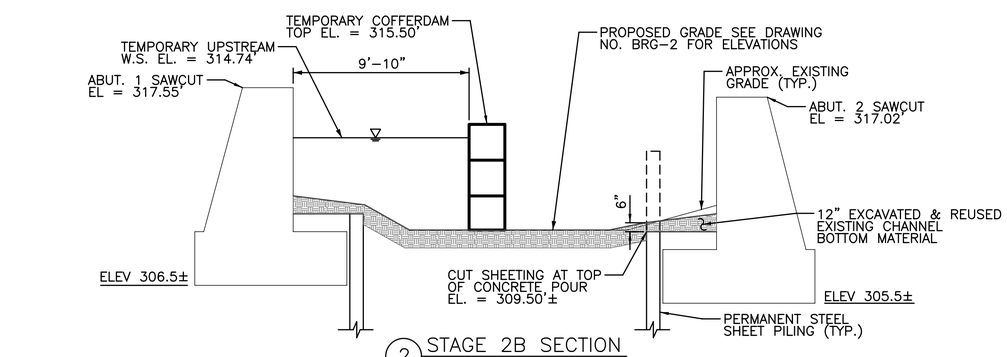

2 STAGE 2B SECTION

SCALE: ¼" = 1'-0"

REV.	DATE	REVISION DESCRIPTION	SHEET NO.

Filename: BRG_7 – Waterhandling.dgn Plotted: 6/30/2016

DESIGNER/DRAFTER: DEH
CHECKED BY: RRC
SCALE AS NOTED

TOWN OF ANDOVER
CONNECTICUT

CME
CME Associates, Inc.
333 East River Drive
East Hartford, CT 06108

PROJECT TITLE:
REHABILITATION OF BRIDGE NO. 04581
TIMES FARM ROAD OVER
THE HOP RIVER

TOWN: ANDOVER

DRAWING TITLE: WATER HANDLING STAGE 2

PROJECT NO. 01-105
DRAWING NO. BRG-7
SHEET NO. 12

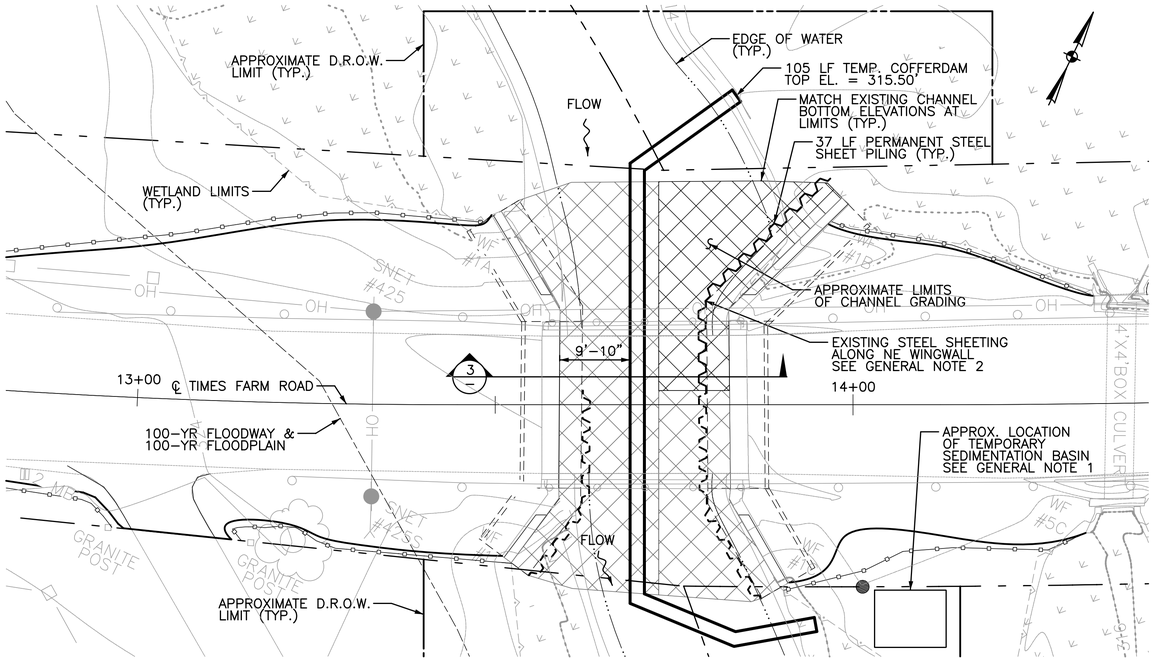

STAGE 3A WATERHANDLING PLAN

SCALE: 1" = 10'-0"

STAGE 3A TEMPORARY FACILITIES HYDRAULIC DATA	
AVERAGE DAILY FLOW (CFS)	21
AVERAGE SPRING FLOW (CFS)	42
2-YR FREQUENCY DISCHARGE (CFS)	480
TEMPORARY DESIGN DISCHARGE (CFS)	84
TEMPORARY DESIGN FREQUENCY	2x AVG. SPRING
TEMPORARY UPSTREAM WATER SURFACE EL. (FT)	314.74
TEMPORARY DOWNSTREAM WATER SURFACE EL. (FT)	314.69

STAGE 3B TEMPORARY FACILITIES HYDRAULIC DATA	
AVERAGE DAILY FLOW (CFS)	21
AVERAGE SPRING FLOW (CFS)	42
2-YR FREQUENCY DISCHARGE (CFS)	480
TEMPORARY DESIGN DISCHARGE (CFS)	84
TEMPORARY DESIGN FREQUENCY	2x AVG. SPRING
TEMPORARY UPSTREAM WATER SURFACE EL. (FT)	313.75
TEMPORARY DOWNSTREAM WATER SURFACE EL. (FT)	313.67

GENERAL NOTES:

1. ALL WATER PUMPED FROM WITHIN THE COFFERDAM TO BE HANDLED THROUGH THE TEMPORARY SEDIMENTATION BASIN. THE TEMPORARY SEDIMENTATION BASIN AND PUMP(S) SHALL BE SIZED BY THE CONTRACTOR AND SUBMITTED TO THE ENGINEER FOR APPROVAL. COST OF TEMPORARY SEDIMENTATION BASIN SHALL BE INCLUDED IN THE COST OF ITEM "COFFERDAM AND DEWATERING".
2. THERE IS EXISTING STEEL SHEETING ALONG THE TOE OF THE NORTH EAST WINGWALL FOOTING. CONTRACTOR TO CUT THE EXISTING SHEETING BELOW TOP OF FOOTING ELEVATION TO ALLOW FOR THE PROPOSED SHEETING INSTALLATION AND CONNECTION TO FOOTING.
3. CONTRACTOR SHALL CLEAR DEBRIS AND ICE BUILD-UP AS REQUIRED TO MAINTAIN FLOW OF THE HOP RIVER THROUGH ALL STAGES OF CONSTRUCTION.

HANDLING WATER NOTES:

1. THE COFFERDAM SHALL BE DESIGNED BY THE CONTRACTOR BASED ON THE SELECTED METHOD OF HANDLING WATER.

SUGGESTED STAGE 3 SEQUENCE:

STAGE 3A

1. SEE STAGE 3 CONSTRUCTION PROCEDURE ON BRG-6.
2. EXCAVATE CHANNEL BOTTOM AS REQUIRED TO INSTALL PERMANENT STEEL SHEET PILING AND CONSTRUCT SHEET PILING CONNECTION AS SHOWN ON BRG-11. STOCKPILE EXISTING CHANNEL BOTTOM MATERIAL FOR RE-USE.
3. CUT EXISTING SHEETING ALONG NORTH EAST WINGWALL.
4. DRIVE PROPOSED SHEET PILING, INSTALL SHEAR STUDS, DRILL AND GROUT REINFORCING BARS, AND POUR CONCRETE CONNECTION. CUT SHEET PILING AT TOP OF CONCRETE POUR AND RE-PLACE EXISTING CHANNEL BOTTOM MATERIAL.
5. GRADE CHANNEL BOTTOM TO PROPOSED GRADES WITHIN THE LIMITS SHOWN ON THE PLANS. MATCH EXISTING CHANNEL BOTTOM ELEVATIONS AT THE LIMITS SHOWN.
7. REMOVE STAGE 2B COFFERDAM.

STAGE 3B

1. INSTALL STAGE 3B TEMPORARY COFFERDAM TO THE LIMITS SHOWN ON THE PLANS AND DEWATER AREA BETWEEN ABUTMENT 1 AND TEMPORARY COFFERDAM.
3. EXCAVATE CHANNEL BOTTOM AS REQUIRED TO INSTALL PERMANENT STEEL SHEET PILING AND CONSTRUCT SHEET PILING CONNECTION AS SHOWN ON BRG-11. STOCKPILE EXISTING CHANNEL BOTTOM MATERIAL FOR RE-USE.
4. DRIVE SHEET PILING, INSTALL SHEAR STUDS, DRILL AND GROUT REINFORCING BARS, AND POUR CONCRETE CONNECTION. CUT SHEET PILING AT TOP OF CONCRETE POUR AND RE-PLACE EXISTING CHANNEL BOTTOM MATERIAL.
5. RE-PLACE EXCAVATED CHANNEL BOTTOM MATERIAL TO FINAL GRADES.
6. REMOVE STAGE 3B COFFERDAM.

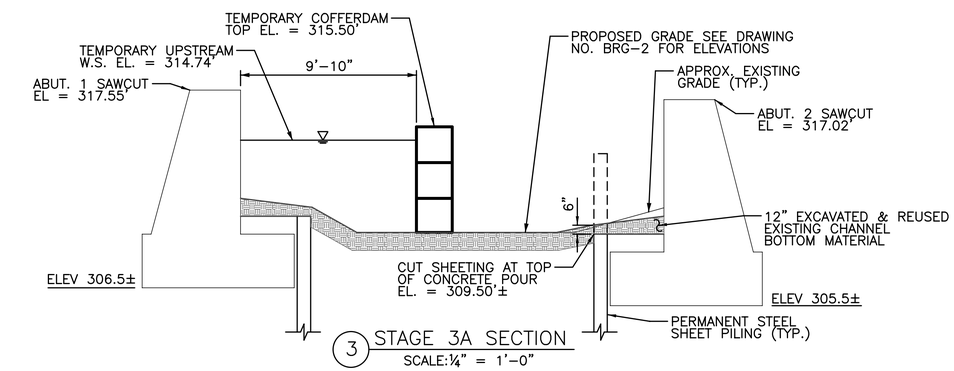

3 STAGE 3A SECTION

SCALE: ¼" = 1'-0"

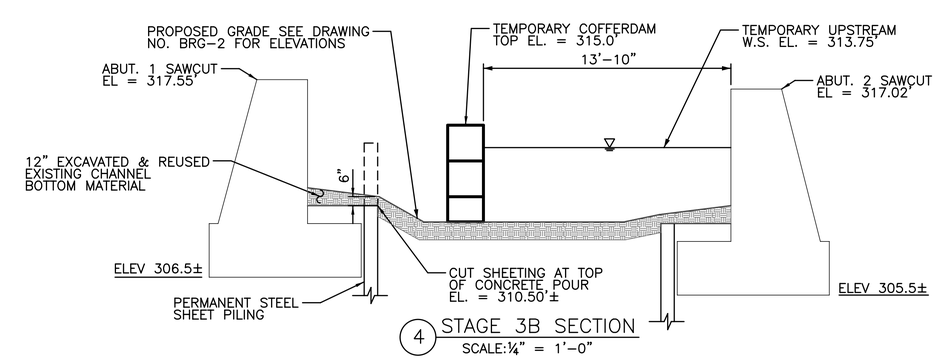

4 STAGE 3B SECTION

SCALE: ¼" = 1'-0"

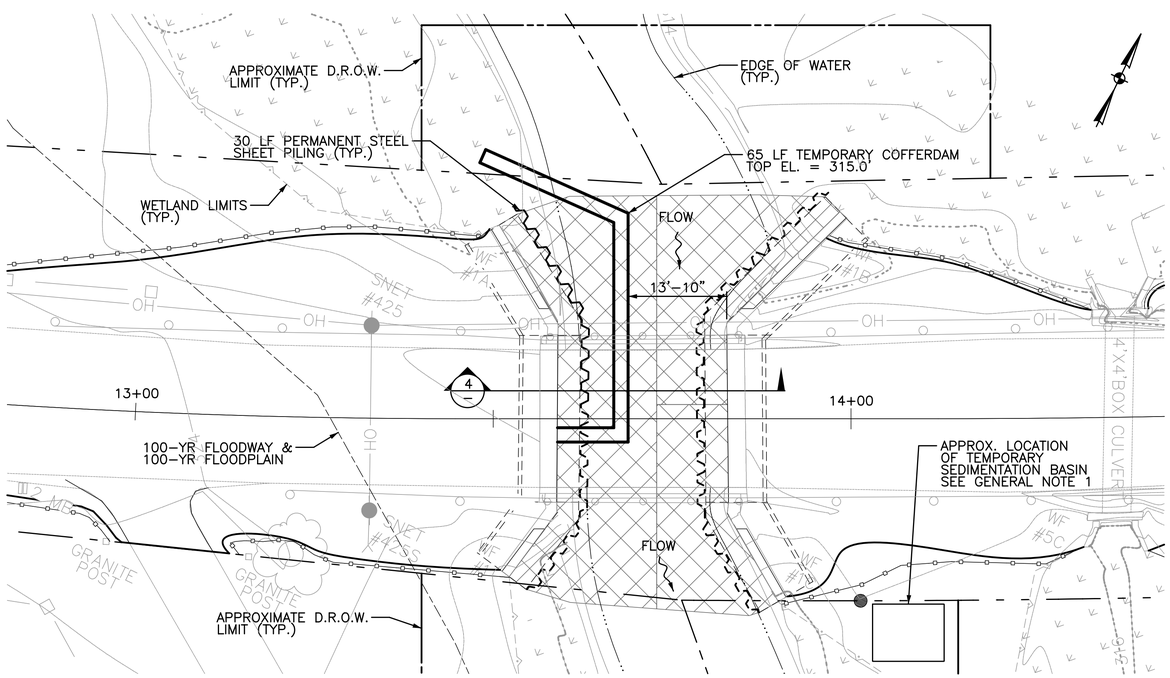

STAGE 3B WATERHANDLING PLAN

SCALE: 1" = 10'-0"

REV.	DATE	REVISION DESCRIPTION	SHEET NO.

Filename: BRG_7 – Waterhandling.dgn Plotted: 6/30/2016

DESIGNER/DRAFTER: DEH
CHECKED BY: RRC
SCALE AS NOTED

TOWN OF ANDOVER
CONNECTICUT

CME
CME Associates, Inc.
333 East River Drive
East Hartford, CT 06108

PROJECT TITLE: REHABILITATION OF BRIDGE NO. 04581 TIMES FARM ROAD OVER THE HOP RIVER

TOWN: ANDOVER

DRAWING TITLE: WATER HANDLING STAGE 3

PROJECT NO. 01-105
DRAWING NO. BRG-8
SHEET NO. 13

SUBSTRUCTURE REPAIR QUANTITIES	
REPAIR TYPE	QTY
SHALLOW PATCH	11 CF
DEEP PATCH	2 CF

NOTES:

1. PERMANENT SHEET PILING NOT SHOWN FOR CLARITY.
2. AT STAGE CONSTRUCTION JOINT ALL LONGITUDINAL BARS SHALL BE MADE CONTINOUS WITH DOWEL BAR SPLICERS (DBS). DBS SHALL BE EPOXY COATED AND INCLUDED IN THE COST OF THE ITEM "DEFORMED STEEL BARS (EPOXY COATED).
3. SUBSTRUCTURE REPAIR QUANTITIES SHOWN ARE APPROXIMATE AND ARE TAKEN FROM THE LATEST INSPECTION REPORTS. DETERIORATED AREAS SHALL BE REPAIRED AS DIRECTED BY THE ENGINEER. ALL REPAIRS SHALL BE DONE WHILE THE TEMPORARY COFFERDAMS ARE ESTABLISHED.
4. THERE IS A 2' HIGH AREA HEAVILY SCALED UP TO ¾" DEEP ALONG THE WATERLINE OF BOTH ABUTMENTS. THIS SHALL BE REPAIRED USING A CEMENTITIOUS GROUT AND BE PAID FOR UNDER "VARIABLE DEPTH PATCH". SEE SUBSTRUCTURE REPAIR DETAILS.
5. BOTTOM OF FOOTING ELEVATIONS TAKEN FROM BORING LOGS. IF ELEVATIONS ARE DIFFERENT THAN THOSE SHOWN, CONTACT THE ENGINEER.

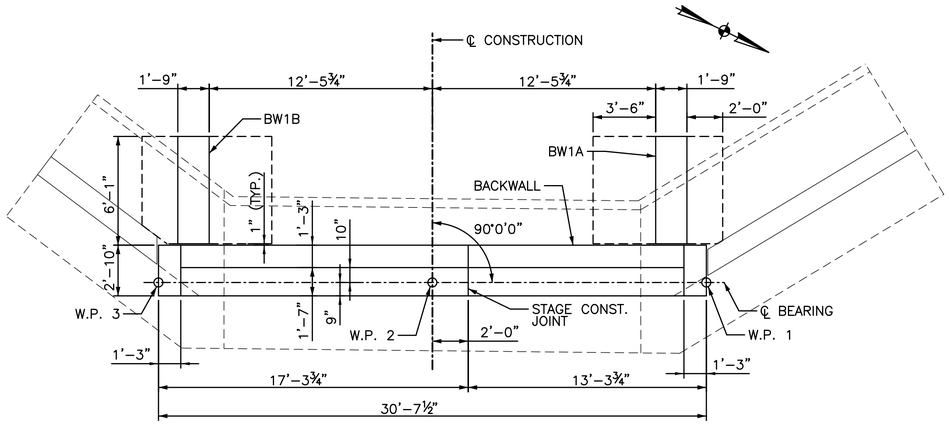

PLAN – ABUTMENT 1
SCALE: ¼" = 1'–0"

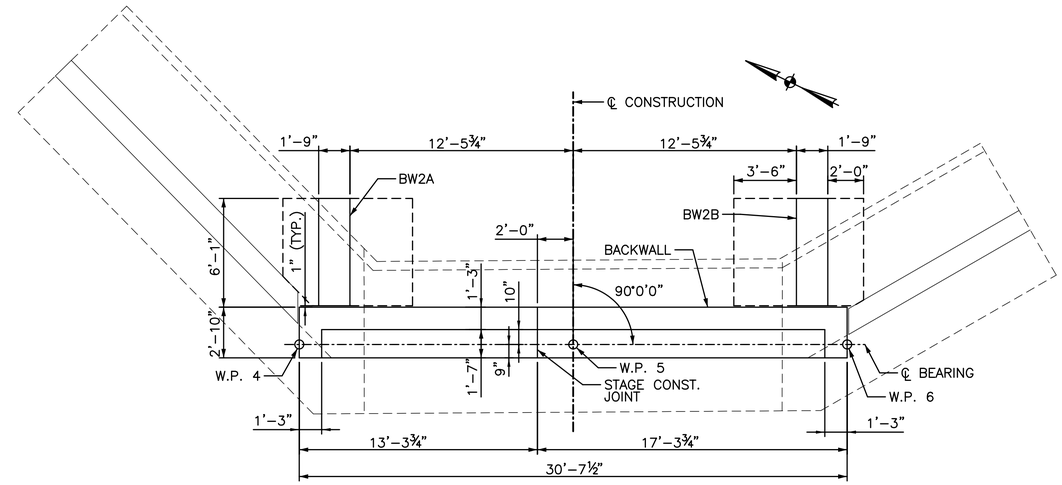

PLAN – ABUTMENT 2
SCALE: ¼" = 1'–0"

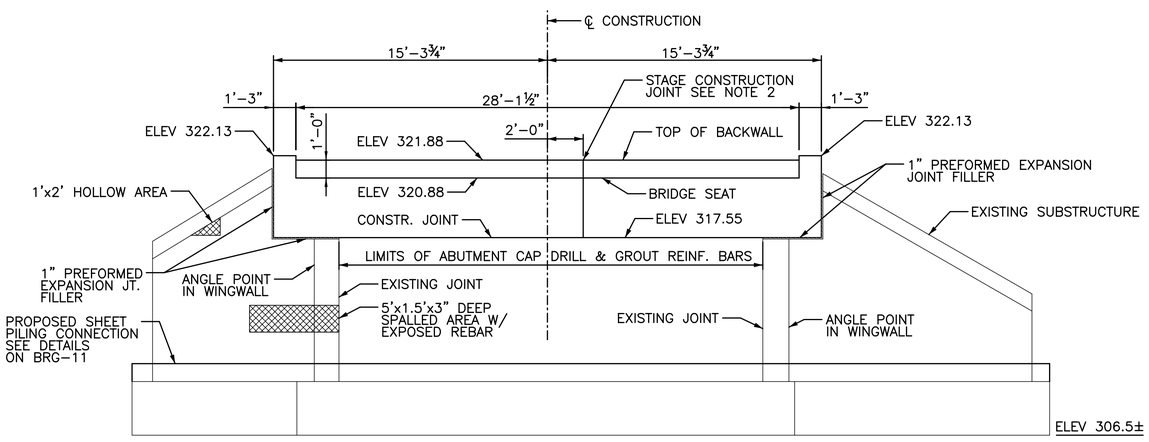

ELEVATION – ABUTMENT 1
SCALE: ¼" = 1'–0"

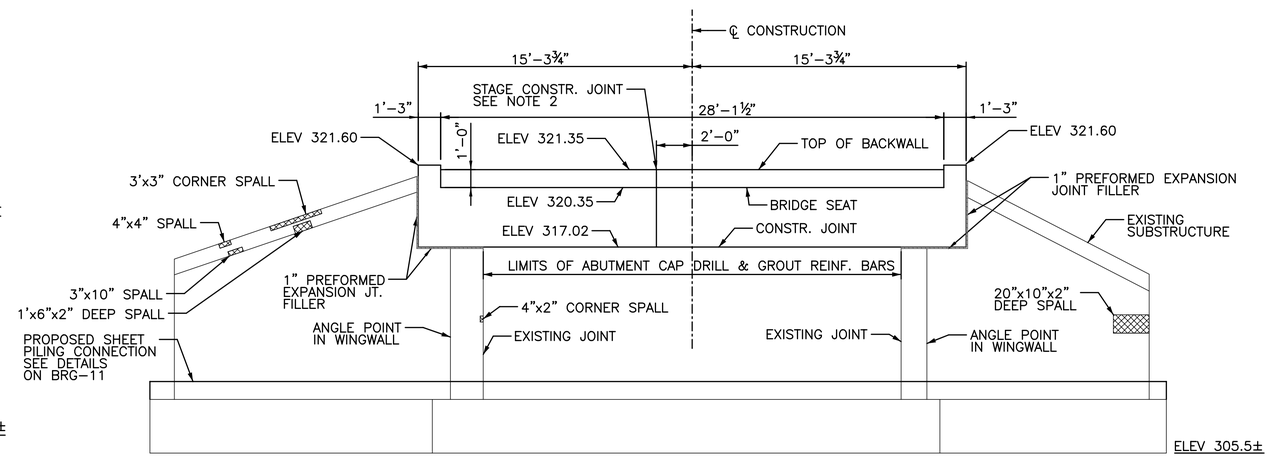

ELEVATION – ABUTMENT 2
SCALE: ¼" = 1'–0"

REV.	DATE	REVISION DESCRIPTION	SHEET NO.

Filename: BRG_9 – Abutment.dgn Plotted: 6/30/2016

THE INFORMATION, INCLUDING ESTIMATED QUANTITIES OF WORK, SHOWN ON THESE SHEETS IS BASED ON LIMITED INVESTIGATIONS AND IS IN NO WAY WARRANTED TO INDICATE THE CONDITIONS OF ACTUAL QUANTITIES OF WORK WHICH WILL BE REQUIRED.

DESIGNER/DRAFTER: DEH
CHECKED BY: RRC
SCALE AS NOTED

TOWN OF ANDOVER
CONNECTICUT

CME
CME Associates, Inc.
333 East River Drive
East Hartford, CT 06108

PROJECT TITLE: REHABILITATION OF BRIDGE NO. 04581 TIMES FARM ROAD OVER THE HOP RIVER

TOWN: ANDOVER

DRAWING TITLE: ABUTMENT PLANS & ELEVATIONS

PROJECT NO. 01–105
DRAWING NO. BRG–9
SHEET NO. 14

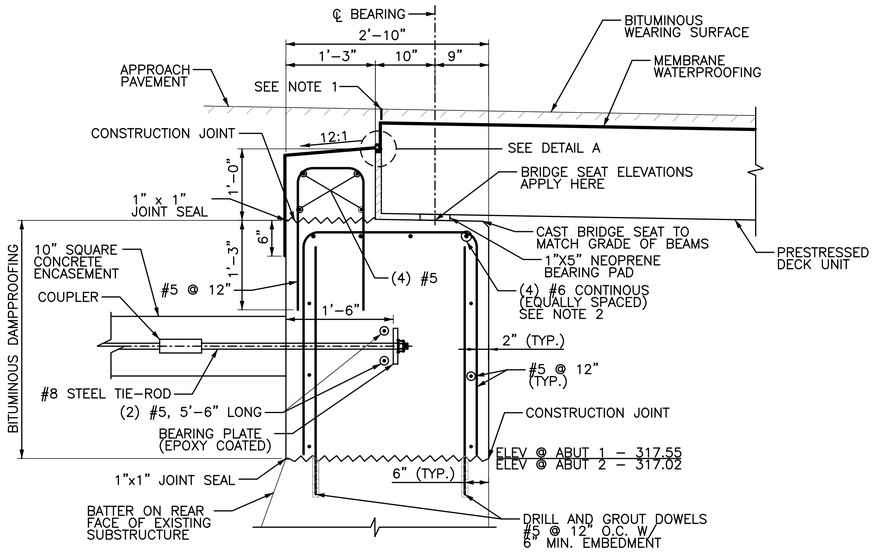

TYPICAL SECTION THROUGH ABUTMENT AT BEARING

SCALE: 1" = 1'–0"

NOTES:

1. CUT BITUMINOUS OVERLAY WITH ⅜" WIDE BY 1¾" DEEP KERF AND FILL WITH POURABLE SEALANT. TO BE PAID FOR UNDER THE ITEM "SAWING AND SEALING JOINTS IN BITUMINOUS PAVEMENT".
2. ALL LONGITUDINAL BARS IN ABUTMENT STEM SHALL BE MADE CONTINOUS THROUGH THE STAGE CONSTRUCTION JOINT WITH THE USE OF DOWEL BAR SPLICERS (DBS). DBS SHALL BE EPOXY COATED AND INCLUDED IN THE COST OF THE ITEM "DEFORMED STEEL BARS (EPOXY COATED).

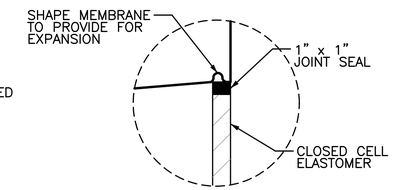

DETAIL – A

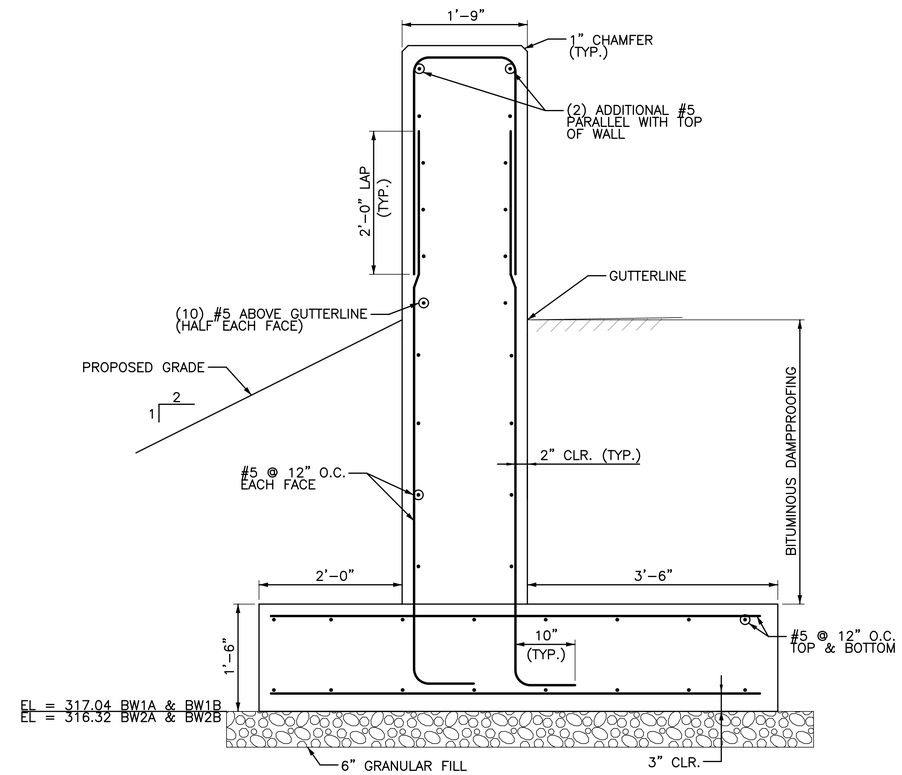

TYPICAL SECTION BARRIER WALL

SCALE: 1" = 1'–0"

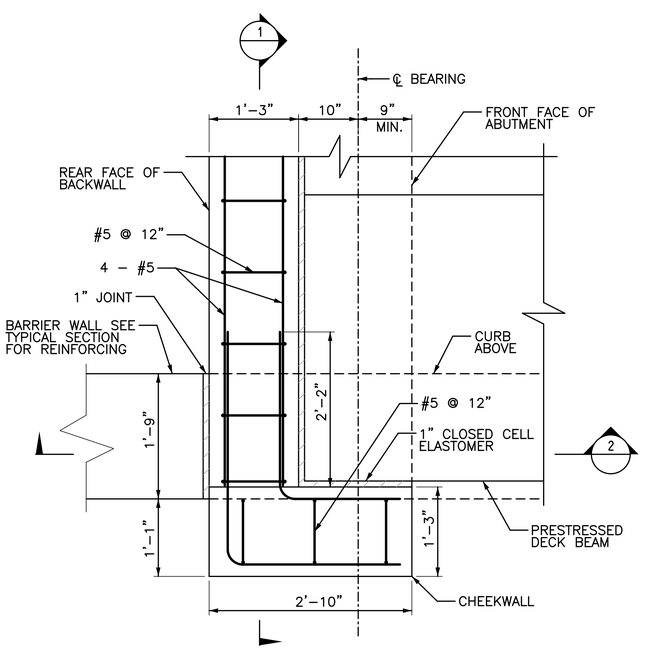

PARTIAL ABUTMENT PLAN

SCALE: 1" = 1'–0"

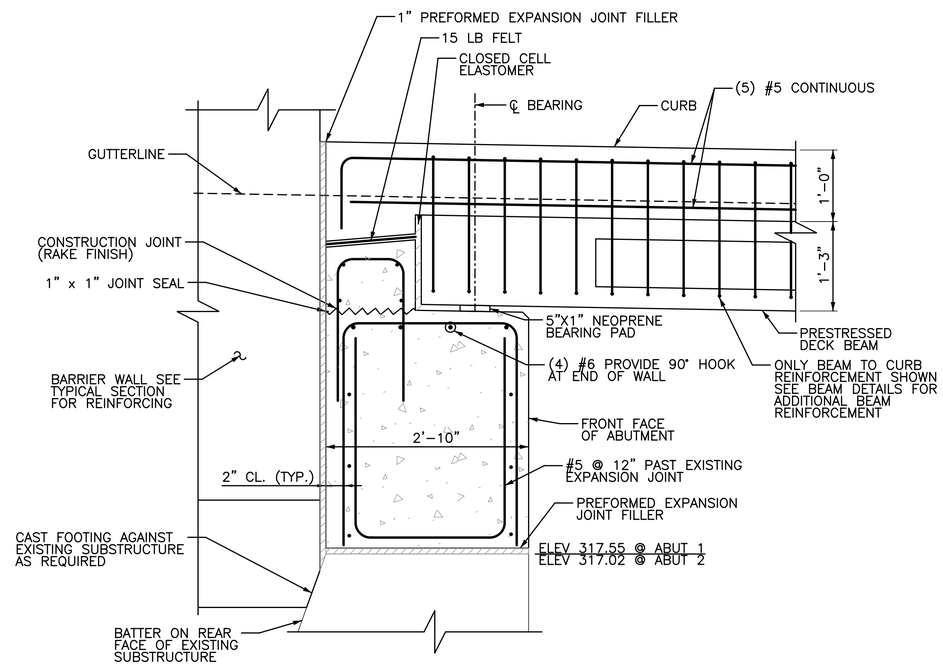

SECTION – 2

SCALE: 1" = 1'–0"

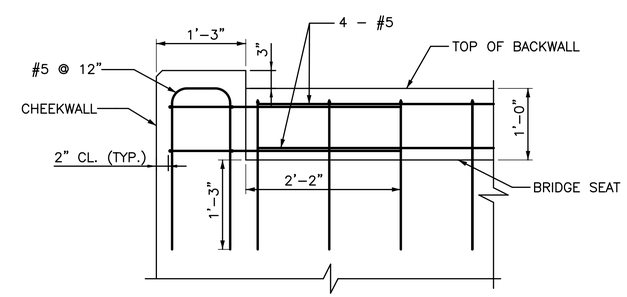

SECTION – 1

SCALE: 1" = 1'–0"

NOTE:
ONLY BACKWALL AND CHEEK WALL REINFORCING SHOWN

REV.	DATE	REVISION DESCRIPTION	SHEET NO.

Filename: BRG_10 – Abut Details.dgn Plotted: 6/30/2016

DESIGNER/DRAFTER: DEH
CHECKED BY: RRC
SCALE AS NOTED

TOWN OF ANDOVER
CONNECTICUT

CME
CME Associates, Inc.
333 East River Drive
East Hartford, CT 06108

PROJECT TITLE: REHABILITATION OF BRIDGE NO. 04581 TIMES FARM ROAD OVER THE HOP RIVER

TOWN: ANDOVER

DRAWING TITLE: ABUTMENT & BARRIER WALL DETAILS

PROJECT NO. 01–105
DRAWING NO. BRG–10
SHEET NO. 15

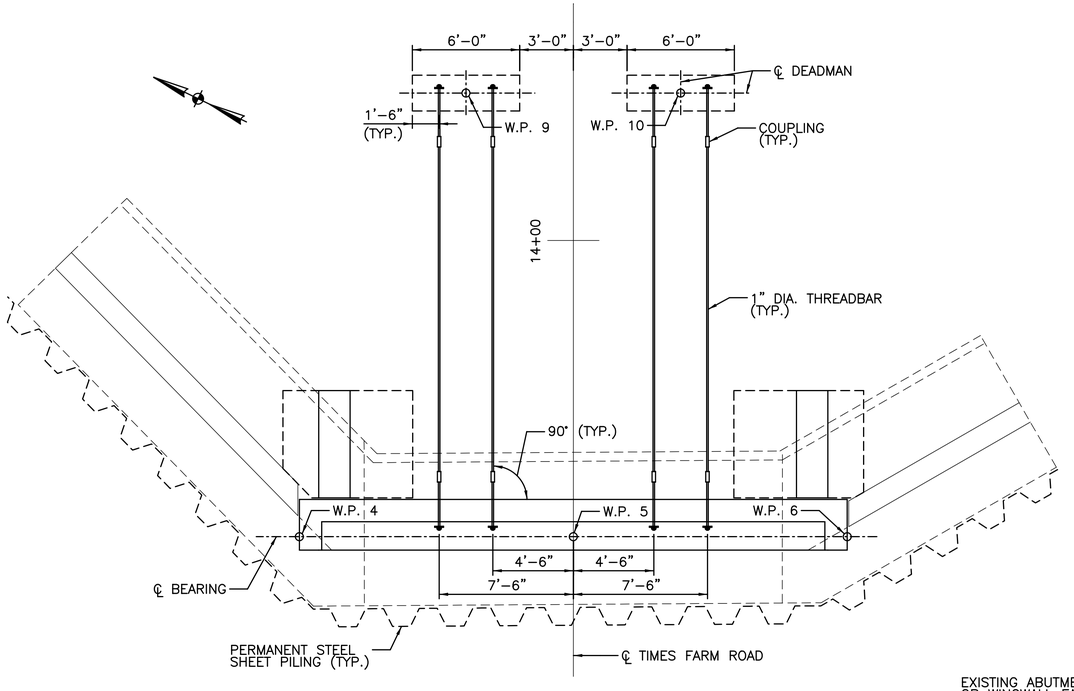

DEADMAN & TIE-ROD LAYOUT

SCALE: ¼" = 1'-0"

NOTE: ABUTMENT 2 SHOWN, ABUTMENT 1 SIMILAR.

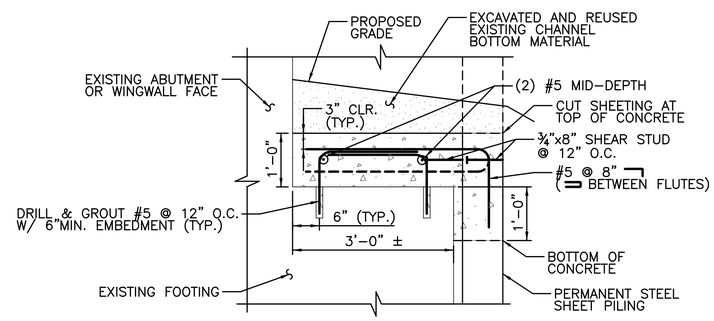

SHEET PILING CONNECTION DETAIL

SCALE: ¾" = 1'-0"

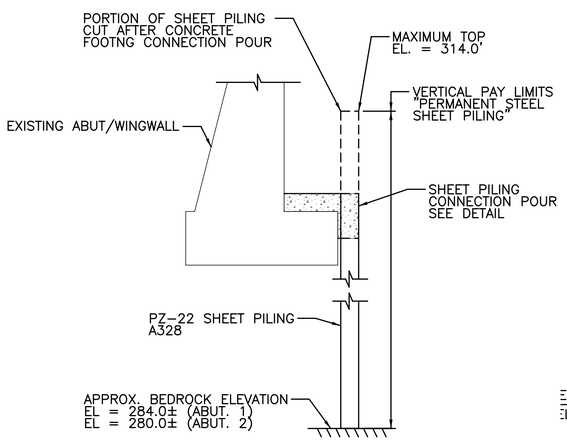

PERMANENT STEEL SHEET PILING SCHEMATIC SECTION

SCALE: ¼" = 1'-0"

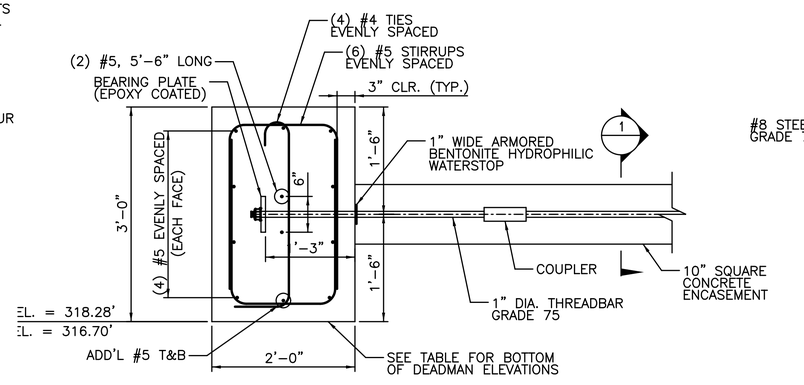

TYPICAL DEADMAN SECTION

SCALE: 1" = 1'-0"

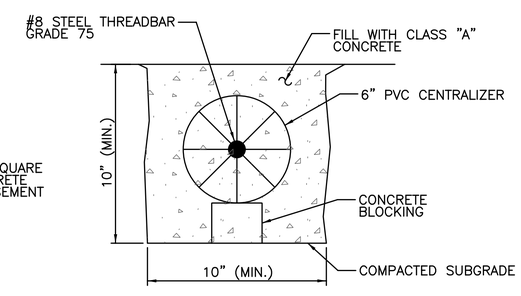

SECTION 1

SCALE: 3" = 1'-0"

GENERAL NOTES:

1. CONCRETE FOR THE DEADMAN, TIE-ROD ENCASEMENT, AND FOOTING CONNECTION POUR SHALL BE CLASS "A" AND INCLUDED IN THE COST OF THE ITEM "CLASS 'A' CONCRETE".
2. ALL REINFORCEMENT IN THE DEADMAN AND FOOTING CONNECTION POUR SHALL BE EPOXY COATED AND INCLUDED IN THE ITEM "DEFORMED STEEL BARS -EPOXY COATED".
3. DRILLED AND GROUTED BARS SHALL USE HILTI HIT-HY 200 ADHESIVE OR APPROVED EQUAL. DRILLING AND GROUTING OF BARS SHALL BE PAID FOR UNDER THE ITEM "DRILLING HOLES AND GROUTING REINFORCING BARS".
4. SHEAR STUDS FOR SHEET PILING CONNECTION SHALL CONFORM TO THE REQUIREMENTS OF ASTM A108 AND SHALL BE PAID FOR UNDER THE ITEM "WELDED STUDS".

DEADMAN NOTES:

1. TIE-RODS SHALL BE #8 STEEL THREADBAR, GRADE 75, WITH A MINIMUM CROSS SECTIONAL AREA OF 0.79 SQUARE INCHES AND CONFORM TO ASTM A615.
2. TIE-RODS SHALL BE PROVIDED WITH DOUBLE CORROSION PROTECTION CONSISTING OF EPOXY COATING APPLIED IN ACCORDANCE WITH ASTM A775 AND A MIN. ENCASEMENT OF 5" IN CLASS "A" CONCRETE. ALL DAMAGED EPOXY COATING SHALL BE TOUCHED UP IN THE FIELD.
3. TIE-RODS SHALL NOT BE FLAME CUT. TIE-RODS SHALL BE CUT PER MANUFACTURERS SPECIFICATIONS.
4. TIE-RODS SHALL NOT BE PRE-TENSIONED.
5. ALL BEARING PLATES, COUPLERS, AND HARDWARE FOR THE TIE-RODS SHALL BE SOURCED FROM THE TIE-ROD MANUFACTURER. IF REQUIRED, TIE-RODS, SHALL BE SPLICED WITH STANDARD COUPLERS. COUPLERS SHALL BE EPOXY COATED.
6. TIE-RODS SHALL BE INSTALLED WITH BEARING PLATE ORIENTED PERPENDICULAR TO THE TIE-ROD AND EMBEDDED IN CONCTRETE. TIE-RODS SHALL HAVE A SLOPE NO GREATER THAN 10° FROM HORIZONTAL.
7. PVC TIE-ROD CENTRALIZERS SHALL BE USED WITHIN THE CONCRETE ENCASEMENT, SUPPORTED ON BRICK, AND SPACED NO MORE THAN 5 FEET ON CENTER.
8. THE SOIL BELOW THE CONCRETE ENCASED TIE-ROD SHALL BE ADEQUATELY COMPACTED PER THE ENGINEERS DIRECTION.
9. A MINIMUM OF 3" COVER SHALL BE MAINTAINED OVER THE TIE-RODS AND ALL HARDWARE.
10. THE COST OF THE TIE-ROD, COUPLERS, BEARING PLATES, HARDWARE, PVC CENTRALIZERS AND ANY OTHER ITEMS NECESSARY, INCLUDING INSTALLATION OF THE TIE-RODS SHALL BE PAID FOR PER TIE-ROD UNDER THE ITEM "PERMANENT ANCHOR TIEBACK SYSTEM".

PERMANENT STEEL SHEET PILING NOTES:

1. PERMANENT STEEL SHEET PILING SHALL BE PZ-22, A328.
2. THE PERMANENT STEEL SHEET PILING SHALL BE DRIVEN TO BEDROCK. IF AN OBSTRUCTION IS ENCOUNTERED CONTACT THE ENGINEER.

REV.	DATE	REVISION DESCRIPTION	SHEET NO.

Filename: BRG_11 - Deadman Details.dgn Plotted: 6/30/2016

DESIGNER/DRAFTER: DEH
CHECKED BY: RRC
SCALE AS NOTED

TOWN OF ANDOVER
CONNECTICUT

CME
CME Associates, Inc.
333 East River Drive
East Hartford, CT 06108

PROJECT TITLE: REHABILITATION OF BRIDGE NO. 04581 TIMES FARM ROAD OVER THE HOP RIVER

TOWN: ANDOVER

DRAWING TITLE: PERMANENT SHEET PILING & DEADMAN DETAILS

PROJECT NO. 01-105
DRAWING NO. BRG-11
SHEET NO. 16

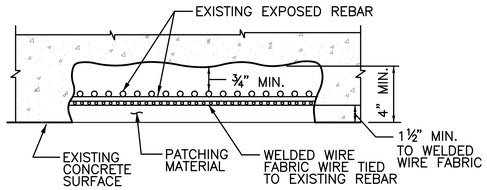

SECTION D–D

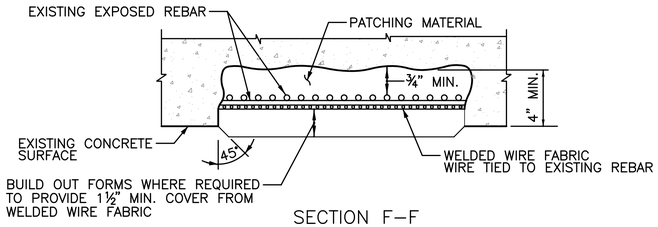

SECTION F–F

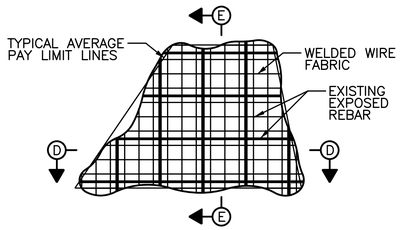

ELEVATION

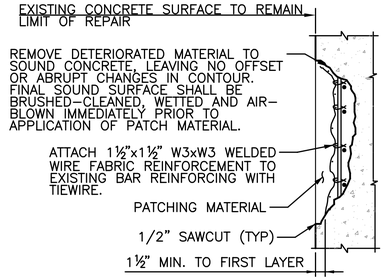

SECTION E–E

WITHOUT BUILD–OUT

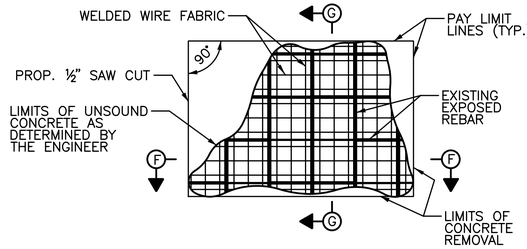

ELEVATION

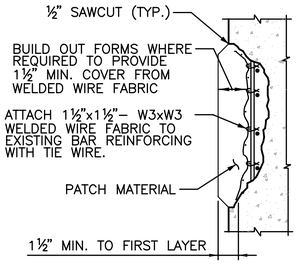

SECTION G–G

WITH BUILD–OUT

1 DEEP PATCH DETAIL
NOT TO SCALE

GENERAL NOTES:

1. THE REMOVAL OF DETERIORATED CONCRETE SHALL PROCEED AS DIRECTED BY THE ENGINEER. IF THE REMOVAL OF DETERIORATED CONCRETE BECOMES EXCESSIVE, THE REMOVAL WORK SHALL BE STOPPED AT THE LOCATION AND THE ENGINEER NOTIFIED IMMEDIATELY.
2. SURFACE PREPARATION, PROPORTIONING AND MIXING OF MATERIALS, APPLICATION OF MATERIALS AND REPAIR PROCEDURES SHALL BE IN ACCORDANCE WITH THE MANUFACTURER'S RECOMMENDATIONS.
3. NEW CONCRETE PATCHES SHALL MATCH SHAPE OF EXISTING CONCRETE SURFACES. UNLESS NOTED OTHERWISE, COLOR OF NEW PATCH CONCRETE SHALL MATCH COLOR OF THE ADJACENT SURFACES AS CLOSELY AS POSSIBLE.
4. EXPOSED REINFORCING BARS SHALL BE BLAST CLEANED AND A SINGLE COMPONENT ZINC PRIMER APPLIED BEFORE APPLYING THE PATCHING MATERIAL.
5. SPLICED REINFORCING BARS SHALL BE COATED WITH A SINGLE COMPONENT ZINC PRIMER AFTER WELDING TO EXPOSED REINFORCING BARS.
6. AREAS DISTURBED BY CONSTRUCTION SHALL BE RESTORED TO THEIR ORIGINAL CONDITION UNLESS OTHERWISE NOTED OR AS ORDERED BY ENGINEER.
7. DEEP PATCH REPAIR SHALL BE USED FOR ALL AREAS WITH EXPOSED REBAR. CLASS "S" CONCRETE SHALL BE USED IIN CONTRACT ESTIMATED QUANTITIES FOR ALL DEEP PATCH REPAIRS. SEE SPECIAL PROVISION "ITEM #0601073A – CLASS "S" CONCRETE".
8. SHALLOW PATCH REPAIR SHALL BE USED FOR ALL UNREINFORCED CONCRETE REPAIR AREAS OR AREAS WHERE NO REINFORCING IS EXPOSED. SHALLOW PATCH REPAIR SHALL USE CEMENTITIOUS MORTAR. SEE SPECIAL PROVISION "ITEM #0601097A – VARIABLE DEPTH PATCH".

DEEP PATCH REPAIR PROCEDURE:

1. REMOVE DETERIORATED MATERIAL TO SOUND CONCRETE LEAVING NO OFFSET OR ABRUPT CHANGES IN CONTOUR.
2. CLEAN EXISTING REINFORCING STEEL AND CONCRETE (NEWLY EXPOSED) BY ABRASIVE BLASTING, SEE SPECIFICATIONS. MISSING OR DETERIORATED REINFORCING STEEL SHALL BE REPLACED AS SHOWN IN DETAIL OR AS DIRECTED BY THE ENGINEER.
3. INSTALL WELDED WIRE FABRIC AND APPLY ZINC PRIMER TO EXISTING AND NEW REINFORCING STEEL.
4. FORM AND PLACE PATCHING CONCRETE IMMEDIATELY FOLLOWING CURING OF THE ZINC PRIMER.
5. A MINIMUM OF 72 HOURS SHALL ELAPSE BETWEEN PLACING OF CONCRETE AND START OF NEXT PATCH.
6. ALL NEW EXPOSED CONCRETE SURFACES WITHIN AREA TO BE REPAIRED SHALL BE RUBBED TO PRODUCE A SMOOTH FINISH.

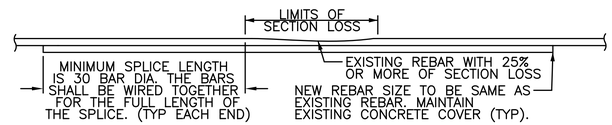

LAPPED, TIED SPLICE BAR

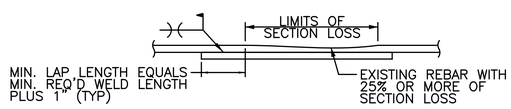

WELDED SPLICE BAR DETAIL

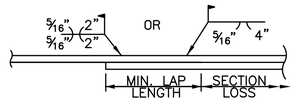

SPLICE DETAIL

3 REINFORCEMENT SPLICE DETAIL
NOT TO SCALE

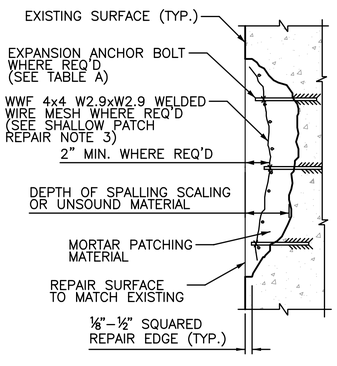

TABLE A	
SIZE AND SPACING OF EXPANSION ANCHOR BOLTS	
THICKNESS OF PATCH MATERIAL	SIZE AND SPACING
4" ±	½" DIA. AT 24" ± CTRS.
5" ±	½" DIA. AT 22" ± CTRS.
6" ±	½" DIA. AT 20" ± CTRS.

SHALLOW PATCH REPAIR NOTES:

1. SHALLOW PATCH REPAIR DETAIL APPLIES TO DETERIORATED AREAS OF UNREINFORCED CONCRETE OR REPAIR AREAS WHERE NO REINFORCING IS EXPOSED.
2. REPAIR DEPTH SHALL BE ⅛" (MIN.) OR GREATER. REPAIR DEPTHS LESS THAN ⅛" NEED NOT BE REPAIRED.
3. FOR AREAS WHERE THE CONCRETE REPAIR EXCEEDS 4" IN DEPTH, A SINGLE LAYER OF WIRE MESH SHALL BE USED TO REINFORCE EACH 2" THICKNESS OF PATCHING MATERIAL. THE COST OF THE WELDED WIRE MESH SHALL BE INCLUDED IN THE COST OF THE PATCHING MATERIAL.
4. THE PERIMETER OF EACH DETERIORATED AREA SHALL BE SQUARED–OFF BY CHISELING OR SAWCUTTING.
5. SURFACE PREPARATION
   A. REMOVE LOOSE AND DETERIORATED CONCRETE, INCLUDING DIRT, OIL, GREASE AND ALL BOND–INHIBITING MATERIALS FROM SURFACE, LEAVING NO OFFSET OR ABRUPT CHANGES IN CONTOUR. SURFACE PREPARATION SHALL BE DONE BY SCABBLER, CHISELING, WIRE BRUSHING OR OTHER APPROPRIATE MECHANICAL MEANS.
   B. ROUGHEN CONTACT SURFACE WITH A MINIMUM PROFILE OF APPROXIMATELY 1/16" FOR BONDING WITH PATCHING MATERIAL.
   C. SATURATE WITH CLEAN WATER PRIOR TO APPLYING MORTAR. SUBSTRATE SHOULD BE SATURATED SURFACE DRY (SSD) WITH NO STANDING WATER DURING APPLICATION OF PATCHING MORTAR.
6. CEMENTITIOUS MORTAR SHALL BE USED FOR ALL SHALLOW PATCH REPAIRS. SEE SPECIAL PROVISION "VARIABLE DEPTH PATCH".
7. EXPANSION ANCHOR BOLTS SHALL CONFORM TO ASTM A307 GRADE A AND BE BE MECHANICALLY GALVANIZED IN ACCORDANCE WITH ASTM B695, CLASS 50, TYPE 1. COST OF BOLTS, INCLUDING INSTALLATION, SHALL BE INCLUDED IN THE COST OF THE PATCHING MATERIAL.
8. NEW CONCRETE SHALL MATCH SHAPE AND COLOR OF EXISTING CONCRETE SURFACE AS CLOSELY AS POSSIBLE.

2 SHALLOW PATCH DETAILS
NOT TO SCALE

REV.	DATE	REVISION DESCRIPTION	SHEET NO.

Filename: BRG_12 – Substructure Repair.dgn Plotted: 6/30/2016

DESIGNER/DRAFTER: DEH
CHECKED BY: RRC
SCALE AS NOTED

TOWN OF ANDOVER
CONNECTICUT

CME
CME Associates, Inc.
333 East River Drive
East Hartford, CT 06108

PROJECT TITLE: REHABILITATION OF BRIDGE NO. 04581 TIMES FARM ROAD OVER THE HOP RIVER

TOWN: ANDOVER

DRAWING TITLE: SUBSTRUCTURE REPAIR DETAILS

PROJECT NO. 01–105
DRAWING NO. BRG–12
SHEET NO. 17

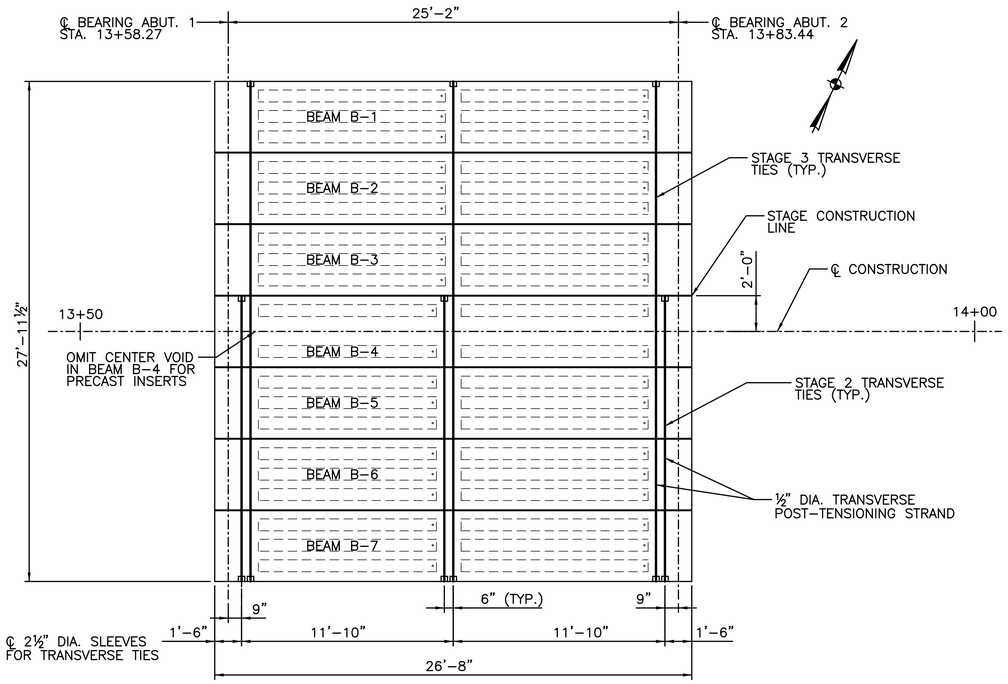

FRAMING PLAN – STAGE CONSTRUCTION

SCALE: ¼" = 1'–0"

NOTES:

STAGE 2: AFTER ERECTING STAGE 2 BEAMS, INSTALL AND TENSION TRANSVERSE TIES IN STAGE 2 SLEEVES

STAGE 3: AFTER ERECTING STAGE 3 BEAMS, INSTALL AND TENSION TRANSVERSE TIES IN STAGE 3 SLEEVES FULL WIDTH OF BRIDGE

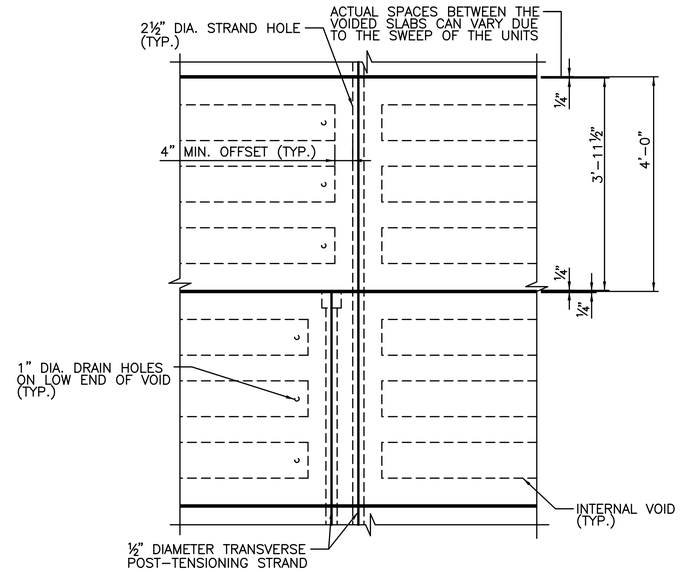

PLAN – TRANSVERSE TIE BLOCKS

SCALE: ¾" = 1'–0"

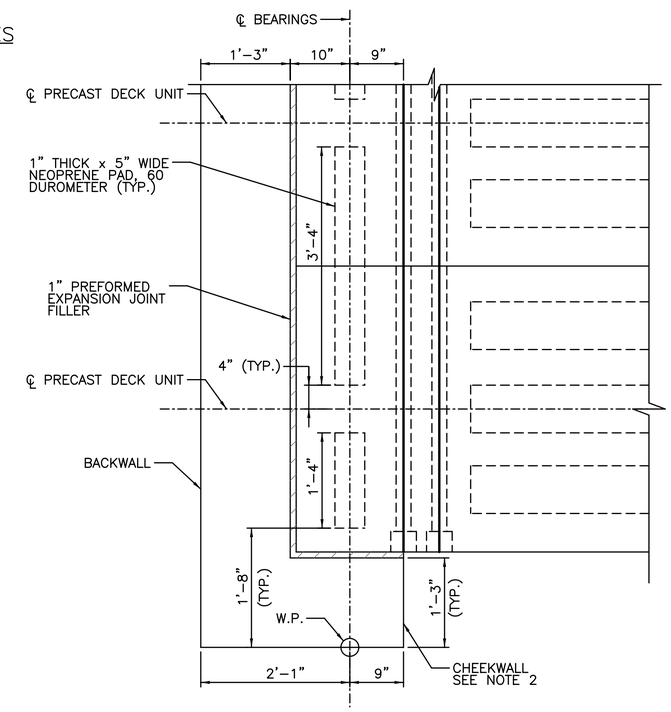

PLAN – ELASTOMERIC BEARING LAYOUT

SCALE: 1" = 1'–0"

NOTES:

1. BEARING PAD AT STAGE CONSTRUCTION JOINT SHALL BE 1'–4" LONG.
2. CONSTRUCT CHEEKWALLS AFTER FINAL POST–TENSIONING HAS OCCURED TO AVOID CONFLICTS WITH POST–TENSIONING EQUIPMENT.

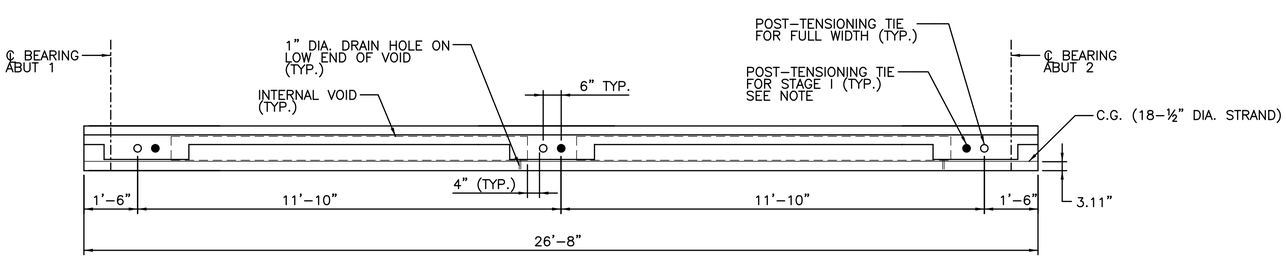

ELEVATION – TYPICAL BEAM

SCALE: ½" = 1'–0"

NOTES:

BEAMS (B1–B4) HAVE 2 SETS OF POST–TENSIONING TIES
BEAMS (B5–B7) HAVE 1 SET OF POST–TENSIONING TIES

REV.	DATE	REVISION DESCRIPTION	SHEET NO.

Filename: BRG_13 – Framing Plan.dgn Plotted: 6/30/2016

DESIGNER/DRAFTER: DEH
CHECKED BY: RRC
SCALE AS NOTED

TOWN OF ANDOVER
CONNECTICUT

CME
CME Associates, Inc.
333 East River Drive
East Hartford, CT 06108

PROJECT TITLE:
REHABILITATION OF BRIDGE NO. 04581
TIMES FARM ROAD OVER
THE HOP RIVER

TOWN: ANDOVER

DRAWING TITLE: FRAMING PLAN

PROJECT NO. 01–105
DRAWING NO. BRG–13
SHEET NO. 18

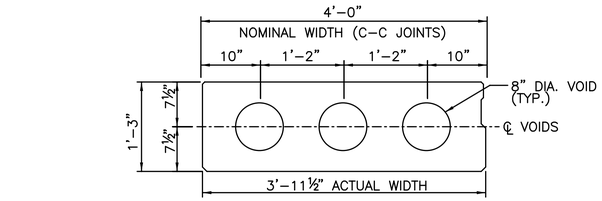

SII–48 FASCIA BEAM

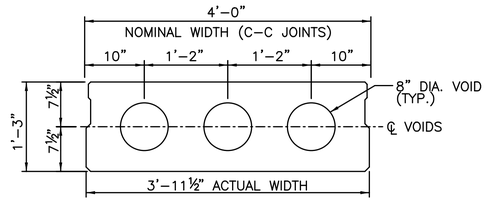

SII–48 INTERIOR BEAM

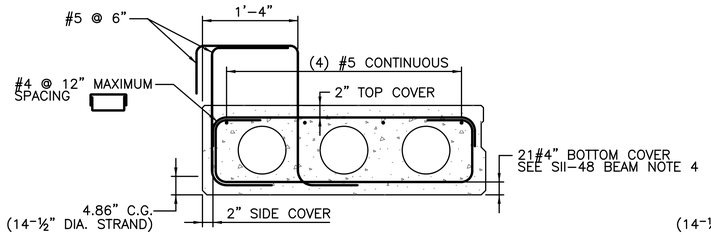

MIDSPAN REINFORCING

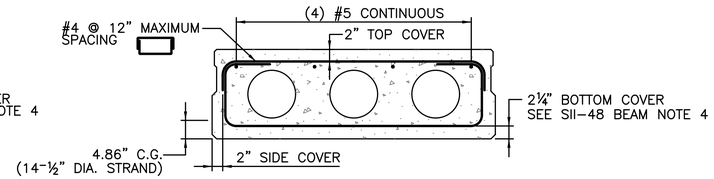

MIDSPAN REINFORCING

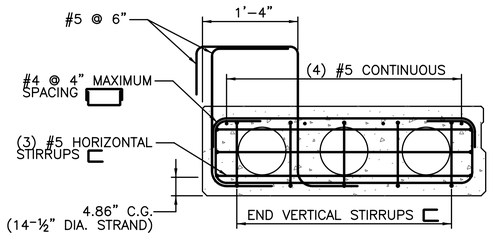

END BLOCK REINFORCING

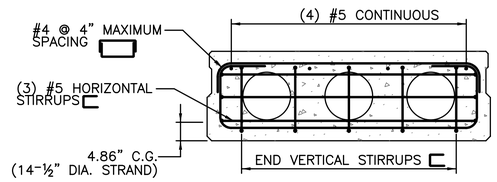

END BLOCK REINFORCING

TYPICAL SII–48 FASCIA BEAM SECTIONS

SCALE: 1" = 1'–0"

TYPICAL SII–48 INTERIOR BEAM SECTIONS

SCALE: 1" = 1'–0"

NOTE: OMIT CENTER VOID AT BEAM B–4. SEE DETAIL.

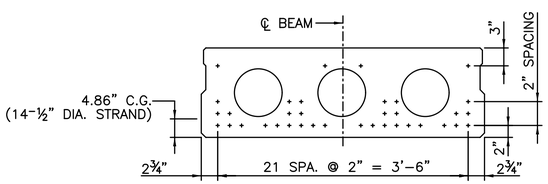

TYPICAL SII–48 STRAND LOCATIONS

SCALE: 1" = 1'–0"

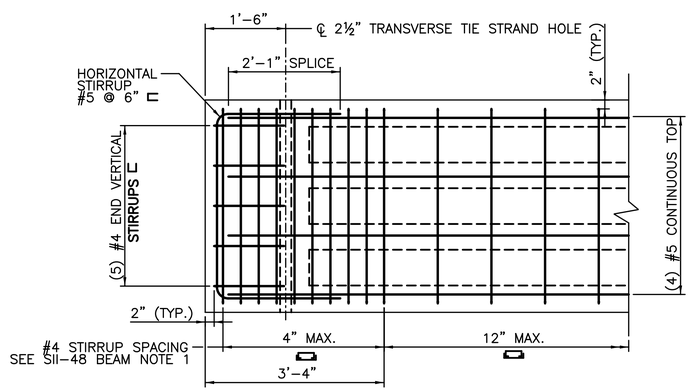

END BLOCK PLAN VIEW

SCALE: ¾" = 1'–0"

SII–48 BEAM NOTES:

1. SHIFT STIRRUPS TO AVOID CONFLICTS WITH TRANSVERSE STRAND HOLES.
2. EXTEND LONGITUDINAL LEGS OF HORIZONTAL STIRRUPS A MINIMUM DISTANCE EQUAL TO THE DEPTH OF THE BEAM INTO THE WEB OF THE VOIDED SECTION.
3. HORIZONTAL LEG LENGTH OF VERTICAL END STIRRUPS ARE EQUAL TO DEPTH OF THE BEAM (15").
4. THIS COVER IS REQUIRED TO FACILITATE THE PLACEMENT OF BOTTOM PRESTRESSING STRANDS. THE FABRICATOR MAY MODIFY COVER (1½" MIN.) IF NO CONFLICTS EXIST WITH THE PRESTRESSING STRANDS.

PRECAST CONCRETE NOTES:

1. PRESTRESSED DECK UNITS SHALL CONFORM TO THE FOLLOWING REQUIREMENTS:
   f'c = 6,500 PSI
   f'ci = 4,000 PSI
2. PRESTRESSED STRANDS SHALL BE ½" DIAMETER, 7–WIRE, LOW RELAXATION STRANDS, AND CONFORM TO THE FOLLOWING REQUIREMENTS:
   ULTIMATE STRENGTH (f's) = 270 KSI
   JACKING TENSION (Fj) = 31 KIPS/STRAND
   NO. OF STRANDS = 14
   C.G. STRANDS = 4.86 IN (MEASURED FROM BOTTOM OF BEAM)
3. PRESTRESSED STRANDS SHALL BE PLACED 2" ON CENTERS MINIMUM AND SHALL HAVE A MINIMUM COVER OF 1½".
4. ENDS OF DECK UNITS SHALL BE VERTICAL AFTER APPLICATION OF FULL DEAD LOAD.
5. NO ADDITIONAL DEAD LOADS OR LIVE LOADS SHALL BE APPLIED TO THE BUTTED DECK UNITS UNTIL THE TRANSVERSE TIES HAVE BEEN FULLY TENSIONED AND THE GROUT IN THE LONGITUDINAL SHEAR KEYS HAS REACHED A SEVEN–DAY COMPRESSIVE STRENGTH OF 4.5 KSI.
6. THE DRILLING OF HOLES IN PRESTRESSED DECK UNITS, OR THE USE OF POWDER ACTUATED TOOLS ON PRESTRESSED DECK UNITS WILL NOT BE PERMITTED.
7. FOR ATTACHMENT OF TEMPORARY PRECAST CONCRETE BARRIERS (STRUCTURE), INSERTS SHALL BE CAST INTO THE DECK UNITS. INSERTS SHALL BE THREADED FOR A 1" DIAMETER BOLT AND SHALL BE CAPABLE OF DEVELOPING A MINIMUM RESISTANCE OF 6K IN SHEAR AND 6K IN TENSION.
8. THREADED INSERTS SHALL BE FILLED WITH NON–SHRINK GROUT AFTER REMOVAL OF THE ANCHORS AND THE MEMBRANE WATERPROOFING PATCHED PRIOR TO FINAL PAVING.
9. POCKETS FOR TRANSVERSE TIE ANCHORAGES SHALL BE DRY PACKED FLUSH WITH THE EXTERIOR SURFACE OF THE FASCIA.

CAMBER NOTES:

1. AT TRANSFER: CAMBER DUE TO PRETENSIONING FORCE AT TRANSFER MINUS THE DEFLECTION DUE TO THE DEAD LOAD OF THE MEMBER.
2. AT ERECTION: CAMBER (DUE TO PRETENSIONING FORCE AT TRANSFER MINUS THE DEFLECTION DUE TO THE DEAD LOAD OF THE MEMBER) THAT IS PRESENT APPROXIMATELY 30 DAYS AFTER THE TRANSFER.
3. FINAL: CAMBER AFTER ALL DEAD LOADS ARE APPLIED TO THE STRUCTURE.
4. POSITIVE CAMBER DENOTES UPWARD DEFLECTION.

CAMBER TABLE

BEAM NUMBER	ESTIMATED CAMBER AT MIDSPAN (INCHES)		
	AT TRANSFER	AT ERECTION	FINAL
1–7	+0.18	+0.32	+0.29

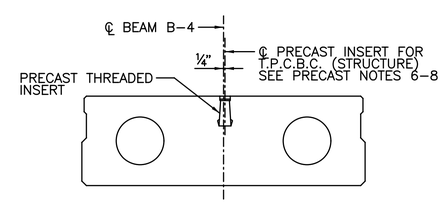

BEAM B–4 DETAIL

SCALE: 1" = 1'–0"

NOTE: OMIT CENTER CIRCULAR VOID TO AVOID CONFLICT WITH INSERTS.

REV.	DATE	REVISION DESCRIPTION	SHEET NO.

Filename: BRG_14 – Beam Sections.dgn Plotted: 6/30/2016

DESIGNER/DRAFTER: DEH
CHECKED BY: RRC
SCALE AS NOTED

TOWN OF ANDOVER
CONNECTICUT

CME
CME Associates, Inc.
333 East River Drive
East Hartford, CT 06108

PROJECT TITLE: REHABILITATION OF BRIDGE NO. 04581 TIMES FARM ROAD OVER THE HOP RIVER

TOWN: ANDOVER

DRAWING TITLE: BEAM SECTIONS

PROJECT NO. 01–105
DRAWING NO. BRG–14
SHEET NO. 19

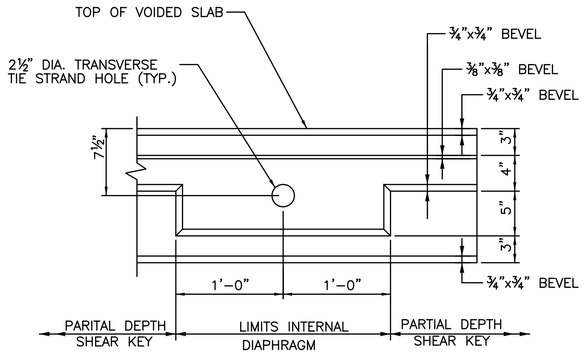

SIDE ELEVATION
INTERNAL DIAPHRAGM AT SINGLE TRANSVERSE POST–TENSIONING DUCT

SCALE: 1½" = 1'–0"

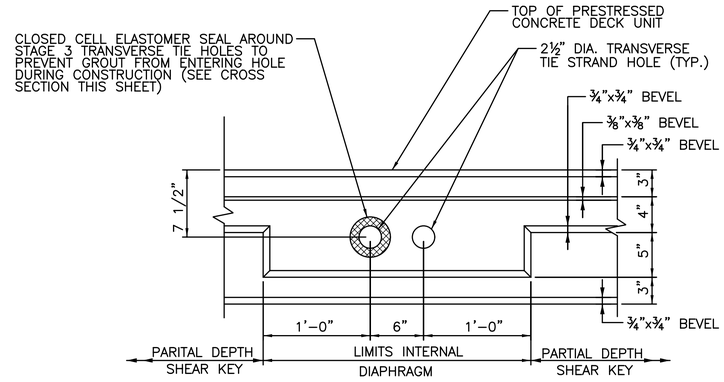

SIDE ELEVATION
INTERNAL DIAPHRAGM AT MULTIPLE TRANSVERSE POST–TENSIONING DUCTS

SCALE: 1½" = 1'–0"

NOTE: COST OF CLOSED CELL ELASTOMER SEAL TO BE INCLUDED IN THE COST OF THE BEAMS.

TRANSVERSE TIE TENSIONING NOTES:

1. AFTER ALL BEAMS HAVE BEEN ERECTED, TENSION EACH TRANSVERSE TIE TO 5 KIPS.
2. FILL ALL KEYWAYS WITH NON–SHRINK GROUT. THE CONTRACTOR SHALL COVER AND PROTECT THE KEYWAYS FROM THE WEATHER AND DEBRIS UNTIL THEY ARE FILLED.
3. AFTER THE GROUT HAS ATTAINED A STRENGTH OF 1500 PSI (BASED ON THE GROUT MANUFACTURERS SPECIFICATIONS) TENSION EACH TRANSVERSE TIE TO 30 KIPS. NO TRAFFIC OR HEAVY EQUIPMENT WILL BE PERMITTED ON THE BEAMS UNTIL ALL TIES HAVE BEEN FULLY TENSIONED.
4. CONCRETE FOR SIDEWALK, CURB AND/OR BARRIER SECTIONS SHALL NOT BE PLACED UNTIL THE TRANSVERSE TIES HAVE BEEN FULLY TENSIONED.

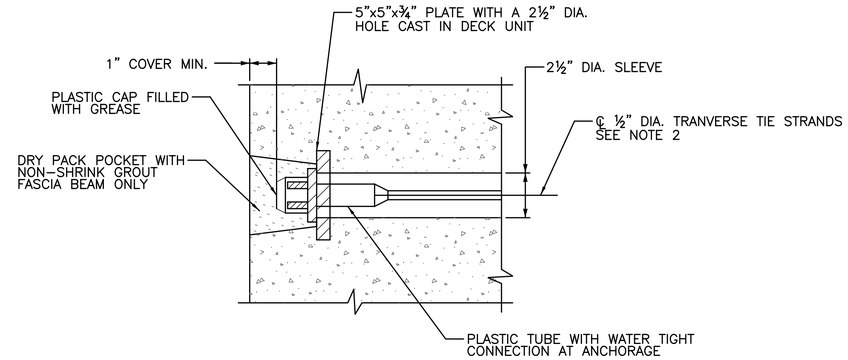

TRANSVERSE TIE POCKET DETAIL

SCALE: 3" = 1'–0"

NOTES:

1. OTHER ANCHORAGE SYSTEMS MAY BE SUBSTITUTED WITH THE APPROVAL OF THE ENGINEER. ALTERNATE ANCHORAGE SYSTEMS SHALL BE WATERTIGHT AND CORROSION PROOF.
2. TRANSVERSE TIES SHALL BE COVERED BY A SEAMLESS POLYPROPYLENE SHEATH (WITH CORROSION INHIBITING GREASE BETWEEN THE STRAND AND SHEATH) FOR THE FULL LENGTH OF THE STRAND EXCEPT AT THE ANCHORAGE LOCATION.

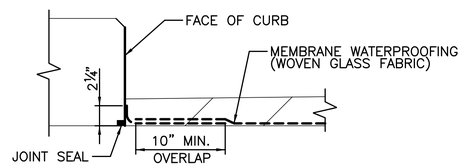

MEMBRANE WATERPROOFING AT GUTTER

N.T.S.

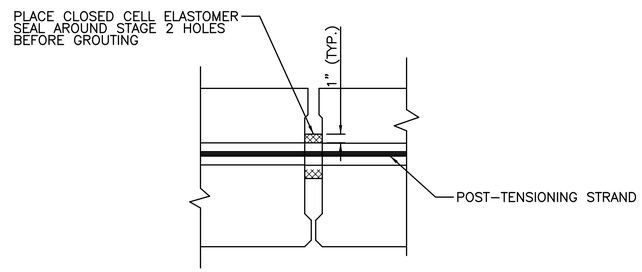

TIE– HOLE SEAL

SCALE: 1½" = 1'–0"

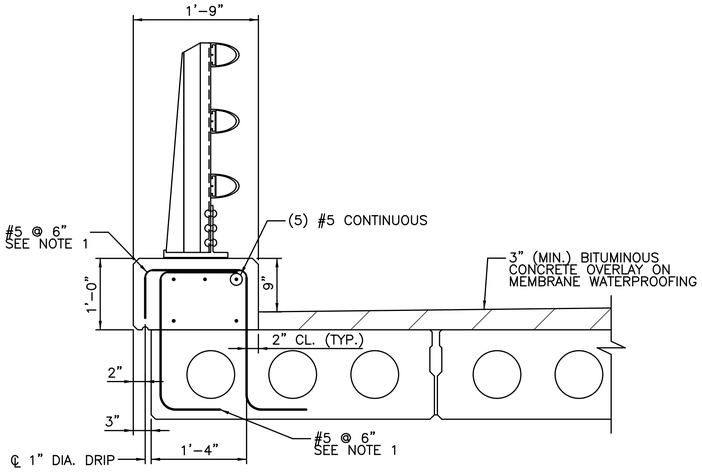

TYPICAL CURB SECTION

SCALE: 1" = 1'–0"

NOTES:

1. REINFORCEMENT EXTENDING FROM PRESTRESSED BEAMS TO BE PAID FOR UNDER THE ITEM "PRESTRESSED CONCRETE DECK UNITS."
2. THE PARAPET SHALL BE CAST WITHOUT JOINTS. LONGITUDINAL REINFORCEMENT SHALL BE CONTINUOUS WITH MINIMUM LAP SPLICES OF 36".

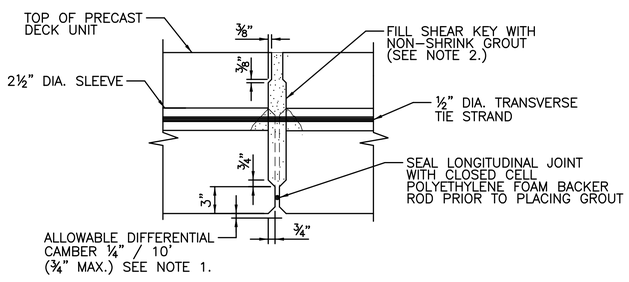

TYPICAL SECTION
INTERNAL DIAPHRAGM AT TRANSVERSE TIE BLOCK

SCALE 1½" = 1'–0"

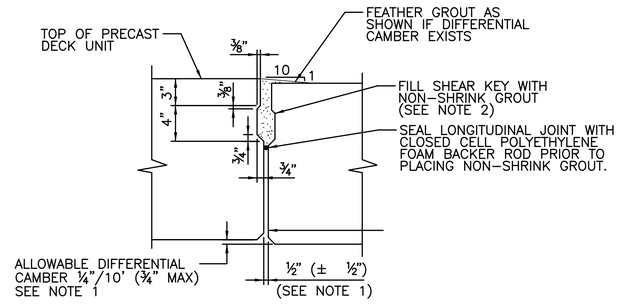

TYPICAL SECTION
PARTIAL DEPTH SHEAR KEY

SCALE: 1½" = 1'–0"

LONGITUDINAL JOINT NOTES:

1. THE DECK UNITS SHALL BE PLACED AT THE NOMINAL SPACING SHOWN ON THE PLANS WITH A ½" WIDE GAP BETWEEN THE UNITS. THE WIDTH OF THE GAP CAN VARY DUE TO SWEEP OF UNITS.
2. GROUT SHALL BE A SINGLE COMPONENT MAGNESIUM PHOSPHATE REPAIR MORTAR THAT BONDS TO CONCRETE WITHOUT A BONDING AGENT.
3. GROUT FOR SHEAR KEYS SHALL BE RODDED OR VIBRATED TO ENSURE THAT ALL VOIDS IN THE SHEAR KEYS ARE FILLED.

REV.	DATE	REVISION DESCRIPTION	SHEET NO.

Filename: BRG_15 – Beam Details.dgn Plotted: 6/30/2016

DESIGNER/DRAFTER: DEH
CHECKED BY: RRC
SCALE AS NOTED

TOWN OF ANDOVER
CONNECTICUT

CME
CME Associates, Inc.
333 East River Drive
East Hartford, CT 06108

PROJECT TITLE: REHABILITATION OF BRIDGE NO. 04581 TIMES FARM ROAD OVER THE HOP RIVER

TOWN: ANDOVER

DRAWING TITLE: BEAM DETAILS

PROJECT NO. 01–105
DRAWING NO. BRG–15
SHEET NO. 20

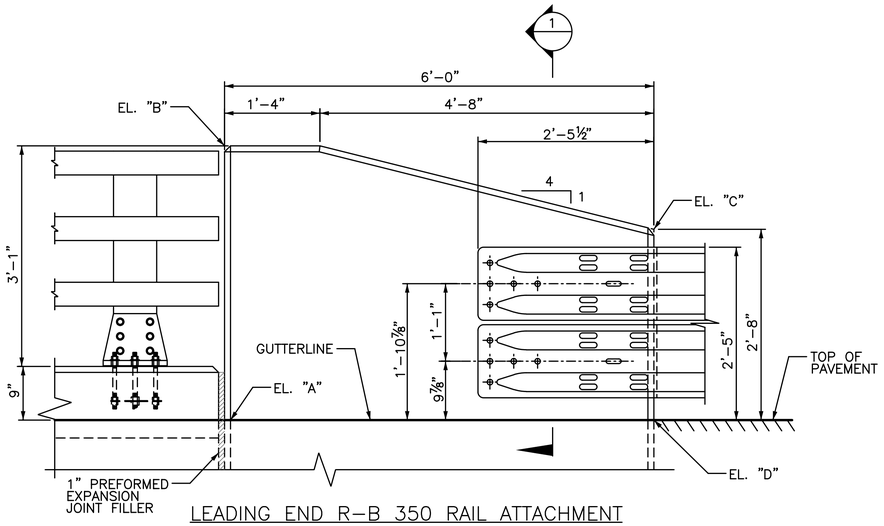

LEADING END R-B 350 RAIL ATTACHMENT

SCALE: 1" = 1'-0"

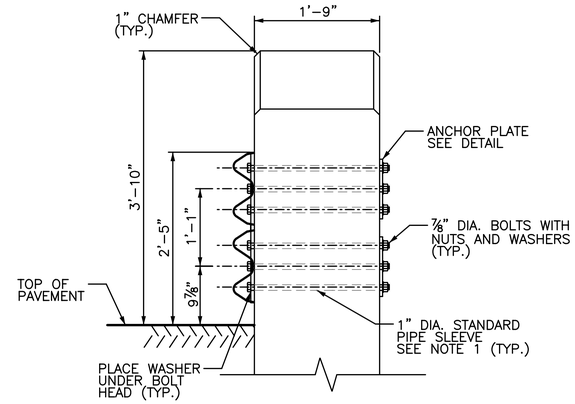

SECTION 1

SCALE: 1" = 1'-0"

RB-350 ATTACHMENT NOTES:

1. THE ANCHOR BOLTS SHALL CONFORM TO THE REQUIREMENTS OF ASTM A325 MECHANICALLY GALVANIZED.
2. NUTS SHALL BE HEAVY HEX AND CONFORM TO THE REQUIREMENTS OF ASTM A563, PROPERTY CLASS 10S.
3. WASHERS SHALL BE CIRCULAR, HARDENED WASHERS CONFORMING TO THE REQUIREMENTS OF ASTM F436.
4. ALL ANCHOR BOLTS, NUTS AND WASHERS SHALL BE MECHANICALLY GALVANIZED IN ACCORDANCE WITH ASTM B695.
5. STEEL PLATES SHALL CONFORM TO THE REQUIREMENTS OF ASTM A36. THE STEEL PLATES SHALL BE HOT-DIP GALVANIZED IN ACCORDANCE WITH ASTM A123.
6. 1" DIAMETER PIPE SLEEVES SHALL CONFORM TO A53 GRADE B OR ASTM A501 AND SHALL BE HOT-DIP GALVANIZED IN ACCORDANCE WITH ASTM A123.

END BLOCK REINFORCING NOTES:

1. COORDINATE END BLOCK REINFORCEMENT WITH PIPE SLEEVES FOR RB-350 ANCHOR BOLTS.

BARRIER WALL ELEVATIONS

BARRIER WALL	ELEV. A	ELEV. B	ELEV. C	ELEV. D	B.F.E.
BW1A	322.54	326.37	325.36	322.70	317.04
BW1B	322.54	326.37	325.36	322.70	317.04
BW2A	321.92	325.75	324.49	321.82	316.32
BW2B	321.92	325.75	324.49	321.82	316.32

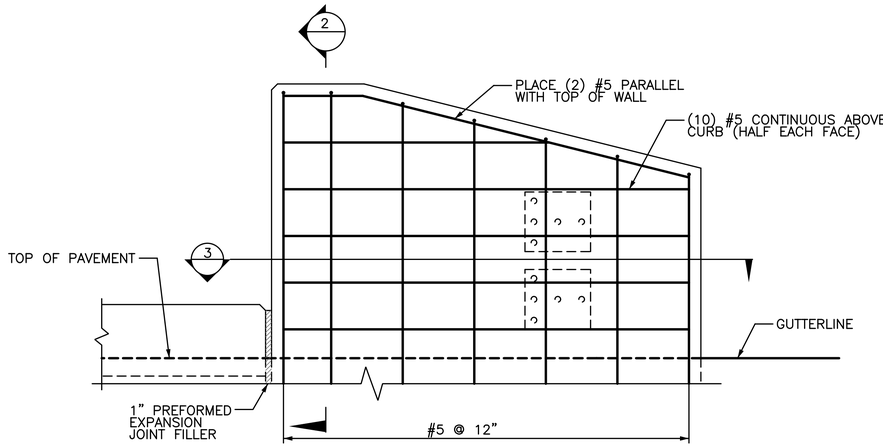

ELEVATION – PARAPET REINFORCEMENT AT LEADING END

SCALE: 1" = 1'-0"

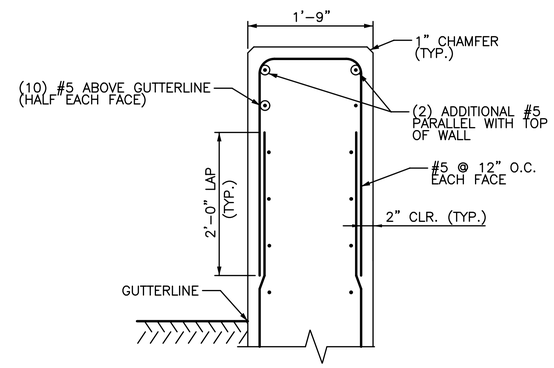

SECTION 2

SCALE: 1" = 1'-0"

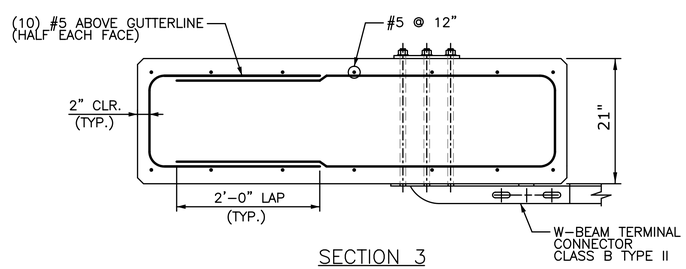

SECTION 3

SCALE: 1" = 1'-0"

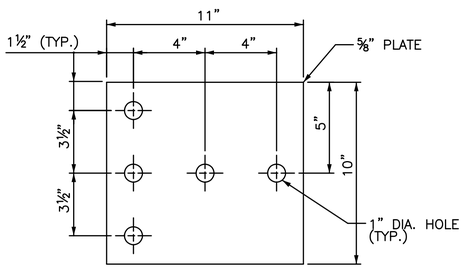

ANCHOR PLATE DETAIL

SCALE: 3" = 1'-0"

REV.	DATE	REVISION DESCRIPTION	SHEET NO.

Filename: BRG_16 – End Block Details.dgn Plotted: 6/30/2016

DESIGNER/DRAFTER: DEH
CHECKED BY: RRC
SCALE AS NOTED

TOWN OF ANDOVER
CONNECTICUT

CME
CME Associates, Inc.
333 East River Drive
East Hartford, CT 06108

PROJECT TITLE: REHABILITATION OF BRIDGE NO. 04581 TIMES FARM ROAD OVER THE HOP RIVER

TOWN: ANDOVER

DRAWING TITLE: PARAPET END BLOCK DETAILS

PROJECT NO. 01-105
DRAWING NO. BRG-16
SHEET NO. 21

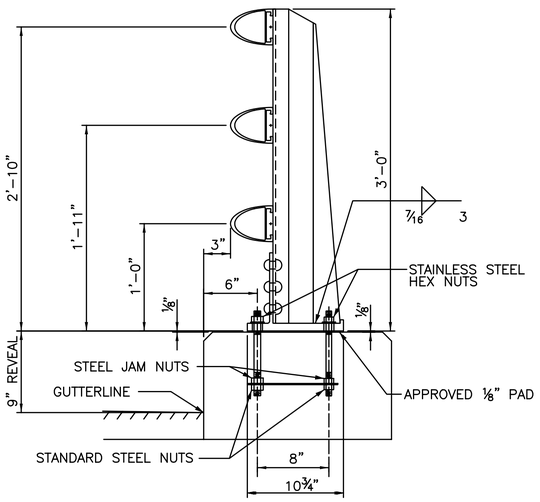

SECTION VIEW

POST ASSEMBLY
SCALE: 1½" = 1'-0"

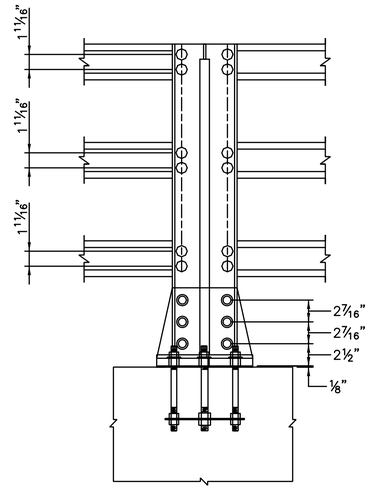

BACK ELEVATION VIEW

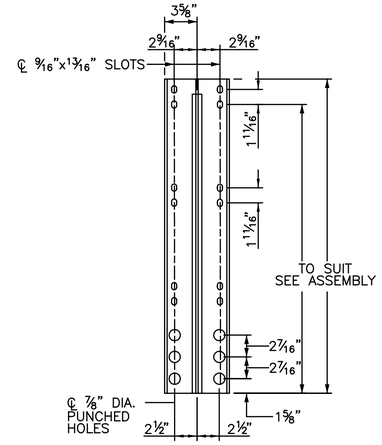

BACK VIEW

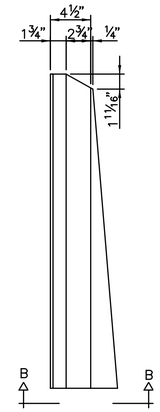

SIDE VIEW

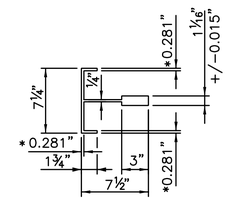

VIEW B-B
* +/- 0.012"

POST DETAILS
SCALE: 1½" = 1'-0"

RAIL NOTES:

1. POSTS SHALL BE PREPENDICULAR TO CURB GRADE.
2. THREADS FOR ANCHOR BOLTS MAY BE ROLLED OR CUT. IF CUT THREADS ARE USED BOLT DIAMETER SHALL NOT BE LESS THAN NOMINAL DIAMETER. IF ROLLED THREADS ARE USED, BOLT DIAMETER SHALL NOT BE LESS THAN ROOT DIAMETER OF THREADS.
3. JOINTS IN RAIL LENGTH SHALL BE SPLICED AS DETAILED.
4. ENDS OF TUBE SECTIONS SHALL BE SPLICED AS DETAILED.
5. CUT ENDS SHALL BE TURE AND SMOOTH.
6. EACH RAIL SECTION SHALL BE ATTACHED TO A MINIMUM OF FOUR (4) POSTS.
7. GRIND ALL EDGES SMOOTH.

MATERIAL NOTES:

1. ALUMINUM EXTRUSIONS (POSTS, BASES, RAILS, SPLICE BARS, PINS AND CLAMP BARS) SHALL BE ASTM B221, ALLOY 6061–T6 OR ALLOY 6005–T6 (MIN. 10% ELONGATION).
2. STAINLESS STEEL ANCHOR STUDS, HEX HEAD BOLTS AND HEX NUTS (TYPE 302) SHALL BE ASTM A276, (TYPE 430 MOD) OR (TYPE 304 MOD). (100,000 PSI AND 15% ELONGATION).
3. STEEL EMBEDDED JAM AND HEX NUTS SHALL BE ASTM A563 GRADE A OR BETTER.
4. ALUMINUM WASHERS SHALL BE ASTM B209, ALLOY 2024–T3 ALCLAD.
5. PREFORMED ELASTOMERIC BEARING PAD SHALL MEET REQUIREMENTS OF AASHTO M251.
6. ANODIZING: WHERE ANODIZED METAL BRIDGE RAIL IS SHOWN ON THE PLANS, THE ALUMINUM ALLOY USED SHALL ONLY BE 6005–T5. THE ANODIZING SHALL CONFORM TO THE REQUIREMENTS OF ASTM B580 TYPE A – ENGINEERING HARD COAT. THE COLOR OF THE ANODIZING SHALL BE DARK BRONZE.

ANCHOR ASSEMBLY NOTES:

1. ¾" & ⅝" AMERICAN STANDARD FINISHED HEXAGON STEEL NUTS ON BOTTOM OF ANCHOR ASSEMBLY, ¾" & ⅝" AMERICAN STANDARD FINISHED HEXAGON STEEL JAM NUTS ON TOP OF ANCHORAGE PLATE.
2. ¾" & ⅝" STAINLESS STEEL HEXAGON NUTS ON TOP ENDS OF BOLTS WITH CLASS 2B THREADS. 13/16" I.D., 2" O.D., ⅛" THICK ALUMINUM WASHERS UNDER NUTS ON TOP. ALL NUTS SHALL COMPLY WITH AMERICAN HEXAGON ANSI SPEC. 818.2 STAINLESS STEEL HEXAGON NUTS SHALL HAVE FULL THREADS.

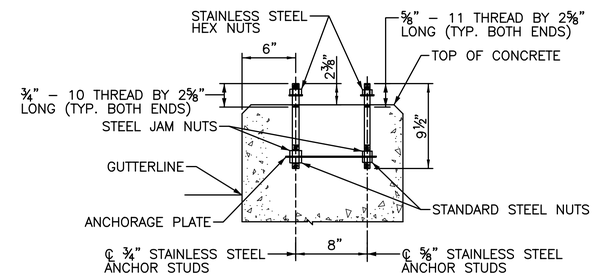

POST ANCHOR ASSEMBLY
SCALE: 1½" = 1'-0"

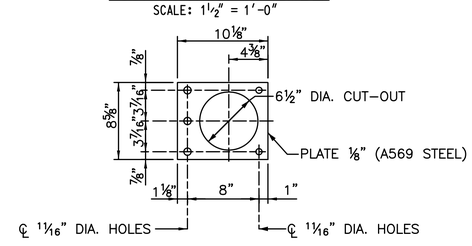

ANCHORAGE PLATE
SCALE: 1½" = 1'-0"

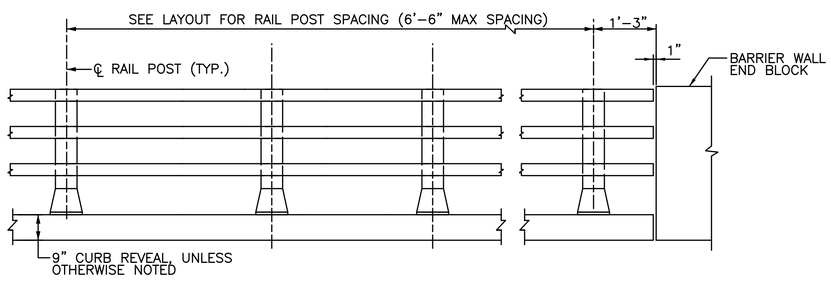

RAIL ELEVATION
NOT TO SCALE

REV.	DATE	REVISION DESCRIPTION	SHEET NO.

Filename: BRG_17 – Bridge Rail.dgn Plotted: 6/30/2016

DESIGNER/DRAFTER: DEH
CHECKED BY: RRC
SCALE AS NOTED

TOWN OF ANDOVER
CONNECTICUT

CME
CME Associates, Inc.
333 East River Drive
East Hartford, CT 06108

PROJECT TITLE:
REHABILITATION OF BRIDGE NO. 04581
TIMES FARM ROAD OVER
THE HOP RIVER

TOWN: ANDOVER

DRAWING TITLE: METAL BRIDGE RAIL

PROJECT NO. 01–105
DRAWING NO. BRG–17
SHEET NO. 22

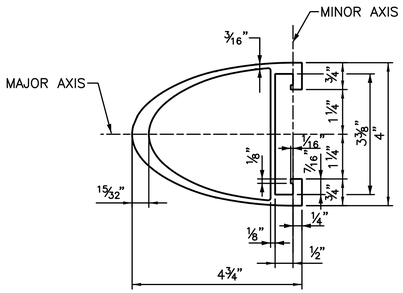

RAIL SECTION
HALF SIZE

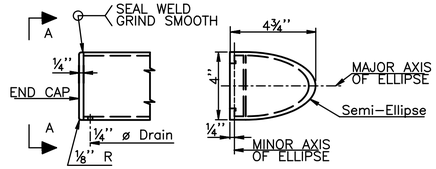

VIEW A–A

END CAP DETAILS
SCALE: 3"= 1'– 0"

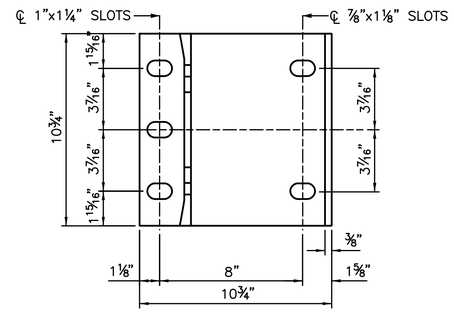

PLAN VIEW

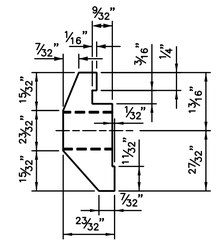

END VIEW

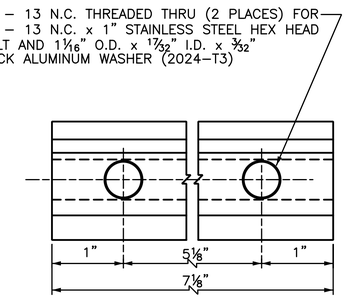

BACK VIEW

RAIL CLAMP BAR
FULL SIZE

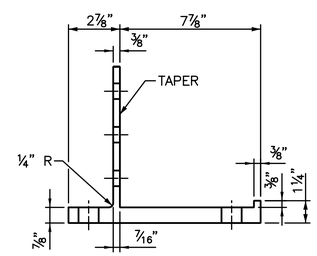

END VIEW

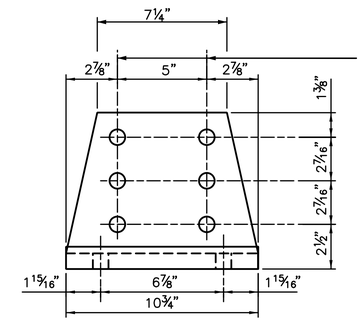

℄ 7/8" DIA. HOLES FOR 7/8" DIA. HIGH BUTTON HEAD RIVETS ASTM B316 OR B221 ALLOY 6061–T6. RIVETS SHALL HAVE MANUFACTURED HIGH BUTTON HEADS MEETING THE DIMENSIONAL REQUIREMENTS OF ANSI B18.4 & SHALL HAVE DRIVEN CONE HEADS.

ELEVATION VIEW

POST BASE DETAILS
SCALE: 3" = 1'–0"

REV.	DATE	REVISION DESCRIPTION	SHEET NO.

Filename: BRG_18 – Bridge Rail Details.dgn Plotted: 6/30/2016

DESIGNER/DRAFTER: DEH
CHECKED BY: RRC
SCALE AS NOTED

TOWN OF ANDOVER
CONNECTICUT

CME
CME Associates, Inc.
333 East River Drive
East Hartford, CT 06108

PROJECT TITLE:
REHABILITATION OF BRIDGE NO. 04581
TIMES FARM ROAD OVER
THE HOP RIVER

TOWN: ANDOVER

DRAWING TITLE: METAL BRIDGE RAIL DETAILS

PROJECT NO. 01–105
DRAWING NO. BRG–18
SHEET NO. 23

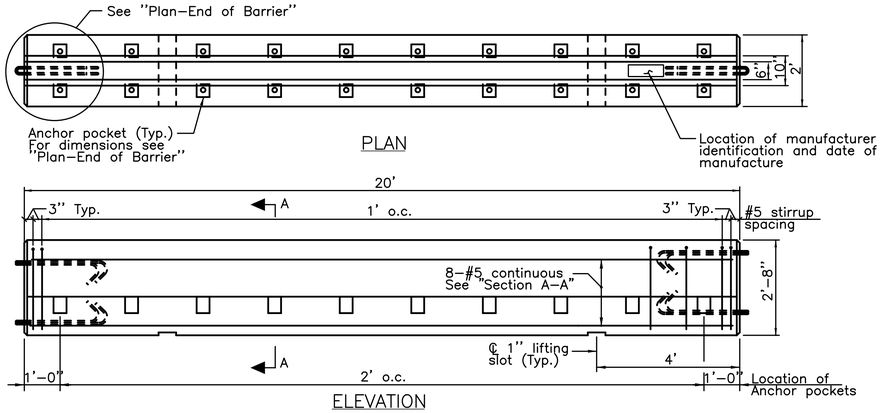

PRECAST BARRIER UNIT (STRUCTURE)

Scale: ½"=1'–0"

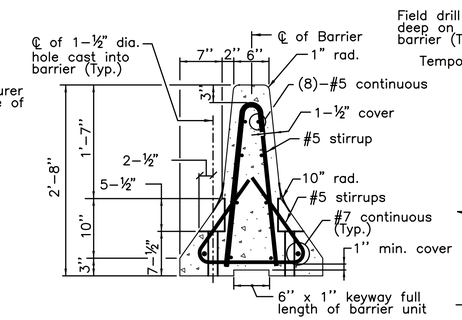

SECTION A–A

Scale: 1"=1'–0"

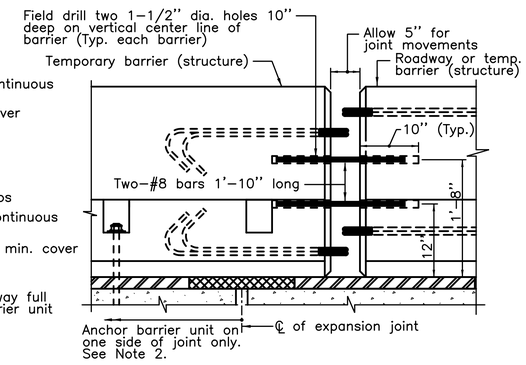

ELEVATION

BARRIER CONNECTION DETAILS

AT EXPANSION JOINTS (CASE II SHOWN)

Scale: 1"=1'–0"

NOTES:

1. The temporary barrier shown on this sheet shall be anchored onto bridge decks (see "Temporary Anchorage System") when it is used to protect a vertical drop–off. The temporary anchorage system shall conform to the following:

   a) Prestressed Deck Units: Threaded inserts shall be used for securing temporary barrier (structure) to prestressed deck units. The threaded inserts shall be cast into the deck units during fabrication and shall be located as required to accommodate the stage construction. See special provisions for additional information.

   b) Chemical Anchoring: This consists of drilling holes in new or existing concrete, placing threaded anchors in the holes, and securing the anchors with a pre–approved chemical anchor material which conforms to M.03.01–15 of the Standard Specifications. Hole diameter shall be determined by the manufacturer of the chemical anchoring material.

   c) Through–Bolting: This consists of drilling through deck slabs and securing removable anchors on the underside with plate washers and nuts. Through–bolting is not permitted on new construction or prestressed concrete. Maximum hole size in slab = 1–½".

2. Number of Anchors: On the traffic side of a typical barrier, anchors shall be installed in all pockets. At barrier units which straddle bridge expansion joints the anchor and connection details shall conform to Table "A".

TABLE "A": BARRIER UNITS AT EXP. JOINTS

Case	Span Length Contributing to Movement at the Expansion Joint.	Method of End Connection to Abutting Barrier Unit. (Where movement will occur)	Anchor Requirements for the Barrier Unit which Straddles the Bridge Joint
I.	Up to 100'	Use 1" connection rod but do not over tighten the nuts and allow room for expansion around the rod and loops.	On one side of the joint only, install as many anchors as possible on the traffic side of the barrier. On the other side of the joint do not install anchors.
II.	100' to 400'	Field drill holes in ends of both units and connect with 2–#8 bars. For details see "Barrier Connection Details".	On one side of the joint only, install a total of 10 anchors. Fill the pockets on the traffic side before filling the pockets on the drop–off side. If this cannot be achieved see III below.
III.	Over 400' and barrier layouts which do not satisfy II.	To be designed by the Contractor and reviewed by Engineer. Cost of designing and furnishing special barrier units or attachments paid for under "TPCBC (Structure)".	To be designed by Contractor and reviewed by Engineer. Cost of designing and furnishing special barrier units or attachments paid for under "TPCBC (Structure)".

3. The work done on this sheet, with the exception of the delineators, shall be paid for under the item "Temporary Precast Concrete Barrier Curb (Structure)".

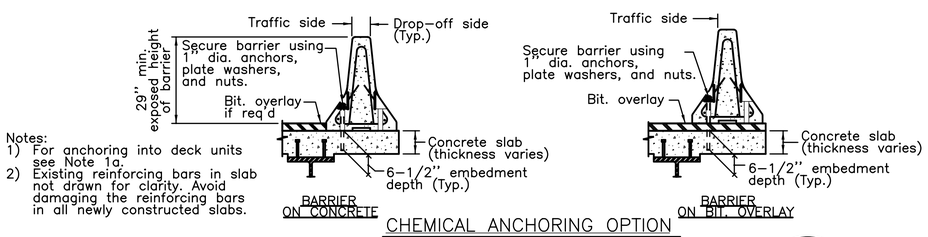

Notes:
1) For anchoring into deck units see Note 1a.
2) Existing reinforcing bars in slab not drawn for clarity. Avoid damaging the reinforcing bars in all newly constructed slabs.

CHEMICAL ANCHORING OPTION

(See Note 1b)

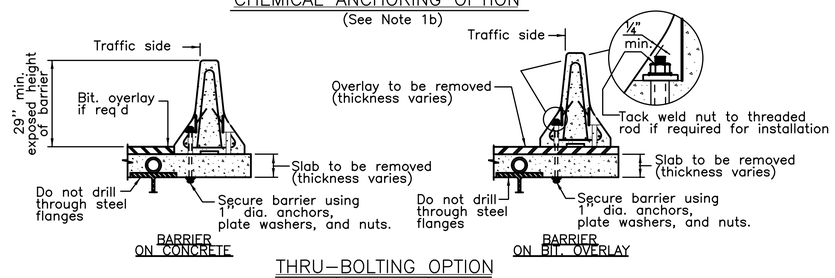

THRU–BOLTING OPTION

(See Note 1c)

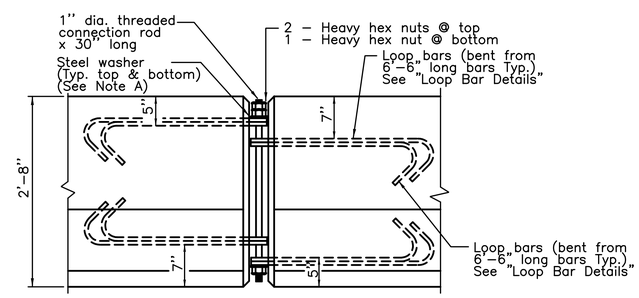

ELEVATION

BARRIER CONNECTION DETAILS

Scale: 1"=1'–0"

NOTES FOR CONNECTION ROD DETAILS
(SEE "ELEVATION–BARRIER CONNECTION DETAILS")

A. Plain circular steel washers shall be manufactured with the following dimensions:
   Outside diameter = 2–¾" (+¼", –0")
   Inside diameter = 1–¼" (± 1/16")
   Thickness = 3/16"

B. The nuts on the connection rod shall be turned until the bottom washer is drawn up against the loop bar. The loop bars shall not be bent due to the tightening process.

C. For ease of removal the threads on the connection rods and nuts shall be waxed.

TEMPORARY ANCHORAGE SYSTEM

Scale: ½"=1'–0"

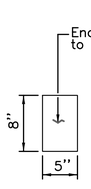

Encapsulated lens reflective sheeting to conform to Article M18.09

COLOR APPLICATION

Left side of all roadways and ramps – YELLOW
Right side of all roadways and ramps – SILVER

COLOR OF DELINEATORS

DE–7A One Way Yellow
DE–7 One Way Silver
DE–7B Two Way Yellow
DE–7C Silver/Yellow Back to Back

Delineators shall be mounted in the center of temporary barriers as required.

SPACING OF DELINEATORS

On leading tapered sections – every unit (20').
On the first 100' of parallel sections – every unit (20').
On the remaining length – every fifth (5th) unit (100').
Minimum of 2 if less than 100'.
Alternating one way traffic – every unit (20').
All other roadways shall be delineated in accordance with M.U.T.C.D.
Paid for under Item "Delineators"

DELINEATORS

N.T.S.

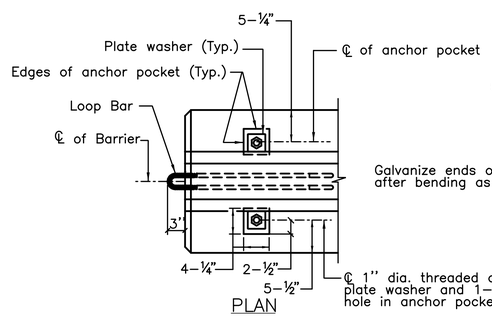

END OF BARRIER

Scale: 1"=1'–0"

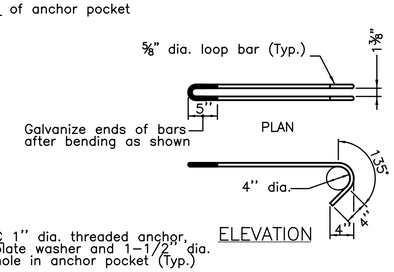

LOOP BAR DETAILS

Scale: 1"=1'–0"

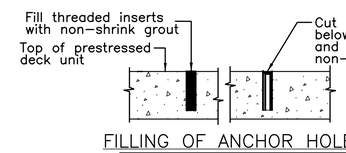

FILLING OF ANCHOR HOLES

Scale: 1"=1'–0"

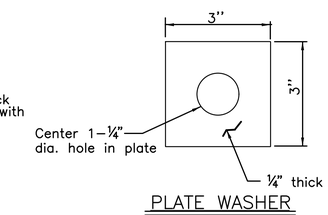

PLATE WASHER

N.T.S.

REV.	DATE	REVISION DESCRIPTION	SHEET NO.

Filename: BRG_19_TPCBC STRUCTURE.dgn Plotted: 6/30/2016

DESIGNER/DRAFTER: DEH
CHECKED BY: RRC
SCALE AS NOTED

TOWN OF ANDOVER
CONNECTICUT

CME
CME Associates, Inc.
333 East River Drive
East Hartford, CT 06108

PROJECT TITLE:
REHABILITATION OF BRIDGE NO. 04581
TIMES FARM ROAD OVER
THE HOP RIVER

TOWN: ANDOVER

DRAWING TITLE:
TEMPORARY PRECAST CONCRETE
BARRIER CURB STRUCTURE

PROJECT NO. 01–105
DRAWING NO. BRG–19
SHEET NO. 24

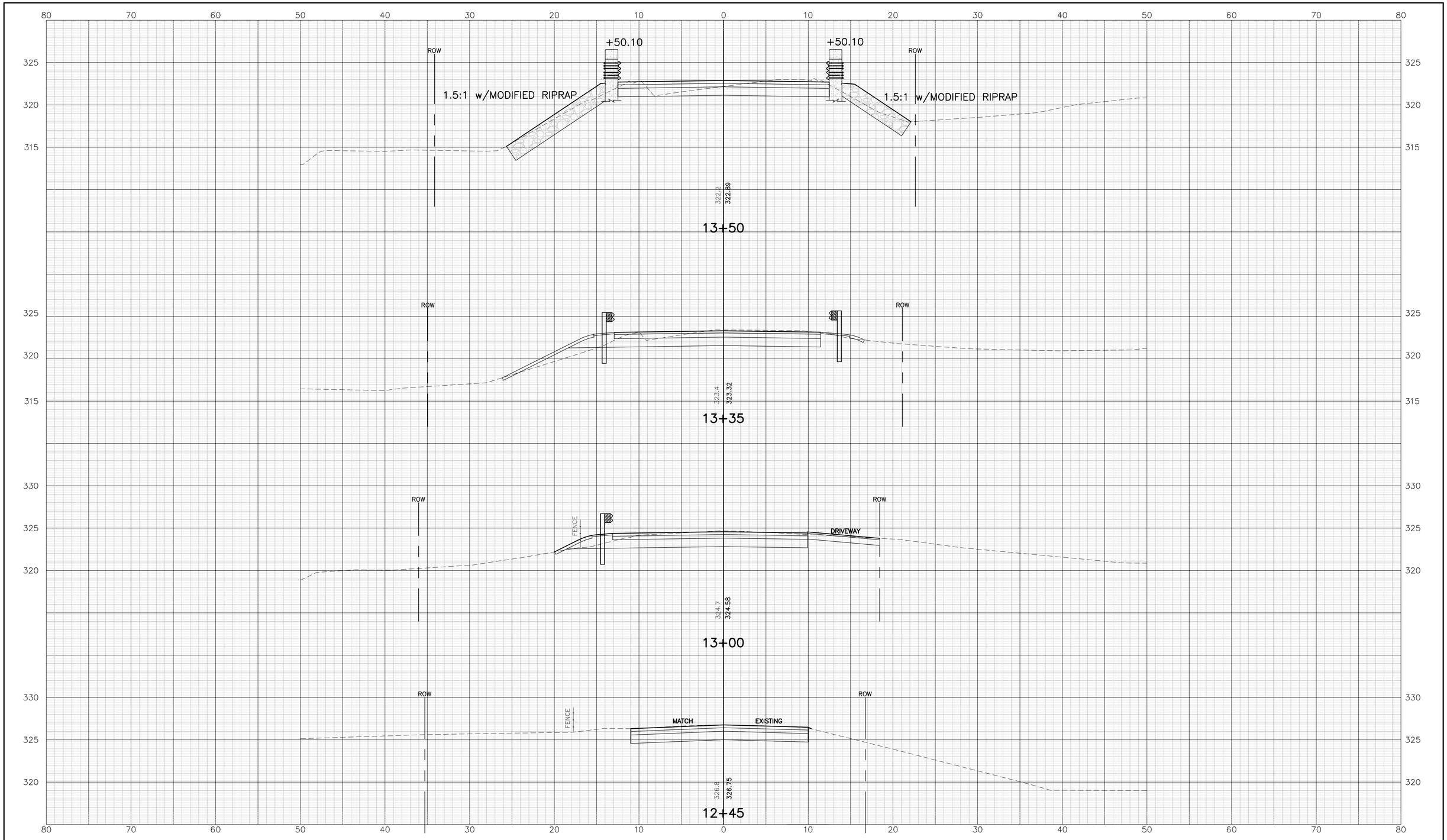

REV.	DATE	REVISION DESCRIPTION	SHEET NO.

Filename: 2003138_X-SECTIONS Plotted: 06/30/16

HORIZ. SCALE IN FEET
5 2.5 0 5
GRAPHIC SCALE IN FEET
VERT. SCALE IN FEET
5 2.5 0 5
GRAPHIC SCALE IN FEET

DESIGNER/DRAFTER: C.L.ROGERS/R.CUTLER
CHECKED BY: S.YOUNG
SCALE AS NOTED

TOWN OF ANDOVER
CONNECTICUT

CME
CME Associates, Inc.
333 East River Drive
East Hartford, CT 06108

PROJECT TITLE:
REHABILITATION OF BRIDGE NO. 04581
TIMES FARM ROAD OVER
THE HOP RIVER

TOWN: ANDOVER

DRAWING TITLE: CROSS SECTIONS

PROJECT NO. 01-105
DRAWING NO. CS-1
SHEET NO. 25

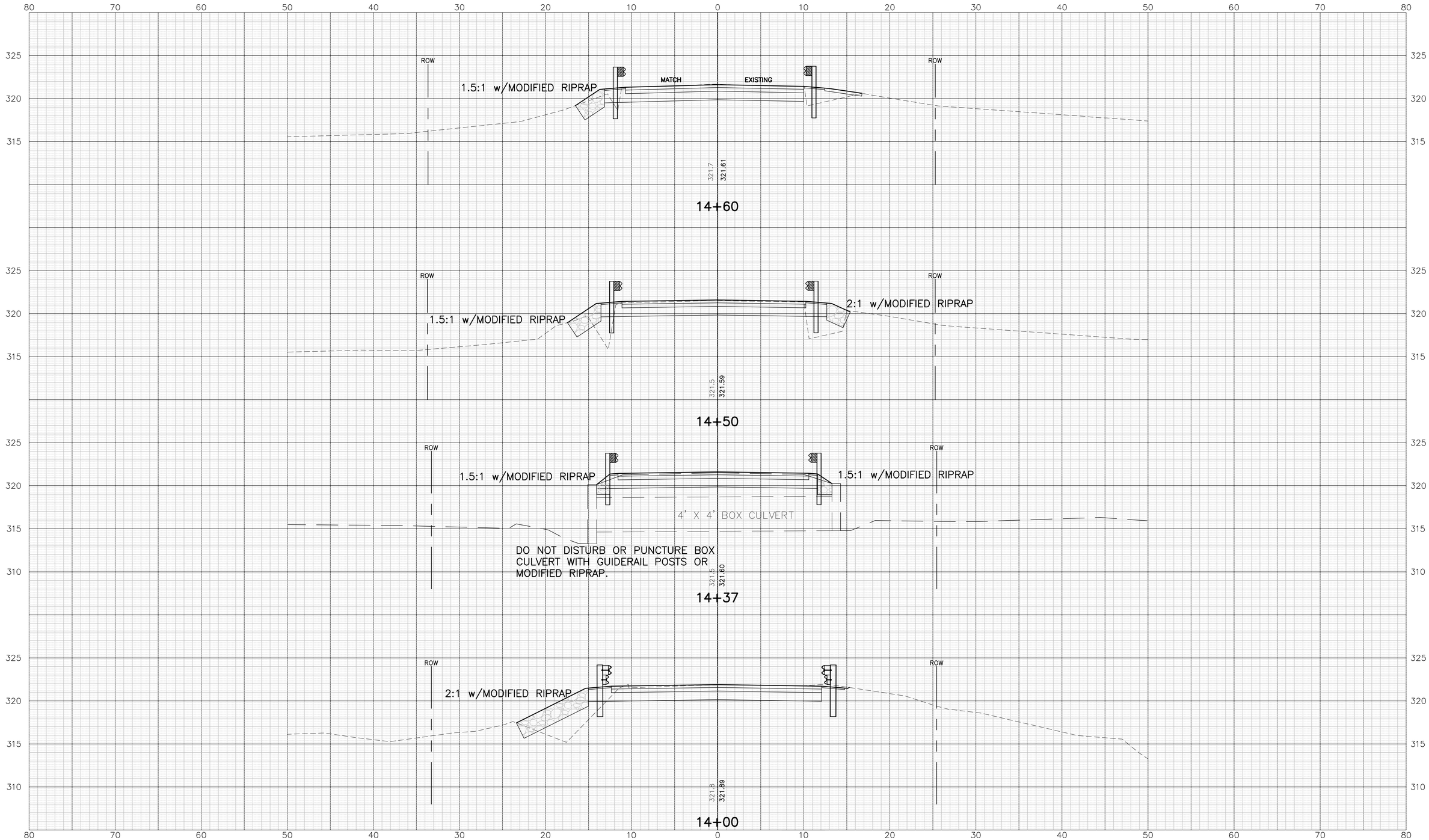

REV.	DATE	REVISION DESCRIPTION	SHEET NO.

Filename: 2003138_X-SECTIONS Plotted: 06/30/16

HORIZ. SCALE IN FEET 5 2.5 0 5 GRAPHIC SCALE IN FEET

VERT. SCALE IN FEET 5 2.5 0 5 GRAPHIC SCALE IN FEET

DESIGNER/DRAFTER: C.L.ROGERS/R.CUTLER

CHECKED BY: S.YOUNG

SCALE AS NOTED

TOWN OF ANDOVER
CONNECTICUT

CME
CME Associates, Inc.
333 East River Drive
East Hartford, CT 06108

PROJECT TITLE:
REHABILITATION OF BRIDGE NO. 04581
TIMES FARM ROAD OVER
THE HOP RIVER

TOWN: ANDOVER

DRAWING TITLE: CROSS SECTIONS

PROJECT NO. 01-105

DRAWING NO. CS-2

SHEET NO. 26

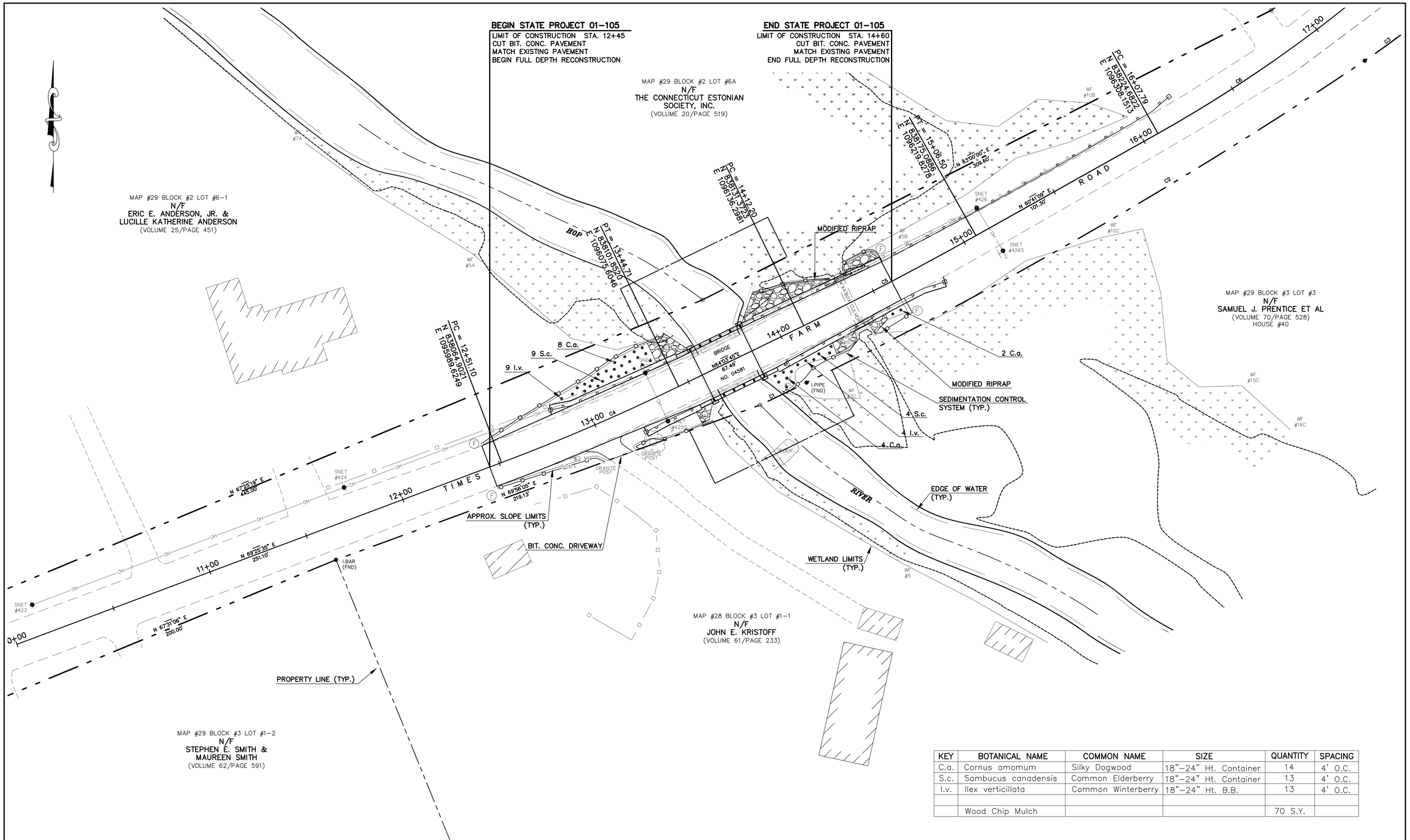

KEY	BOTANICAL NAME	COMMON NAME	SIZE	QUANTITY	SPACING
C.a.	Cornus amomum	Silky Dogwood	18"–24" Ht. Container	14	4' O.C.
S.c.	Sambucus canadensis	Common Elderberry	18"–24" Ht. Container	13	4' O.C.
I.v.	Ilex verticillata	Common Winterberry	18"–24" Ht. B.B.	13	4' O.C.
	Wood Chip Mulch			70 S.Y.	

REV.	DATE	REVISION DESCRIPTION	SHEET NO.

Filename: 2003138_LandscapePlan Plotted: 06/30/16

THE INFORMATION, INCLUDING ESTIMATED QUANTITIES OF WORK, SHOWN ON THESE SHEETS IS BASED ON LIMITED INVESTIGATIONS AND IS IN NO WAY WARRANTED TO INDICATE THE CONDITIONS OF ACTUAL QUANTITIES OF WORK WHICH WILL BE REQUIRED.

DESIGNER/DRAFTER: D. HOFFMAN
CHECKED BY: R. CANAVAN
SCALE AS NOTED

TOWN OF ANDOVER
CONNECTICUT

CME
CME Associates, Inc.
333 East River Drive
East Hartford, CT 06108

PROJECT TITLE:
REHABILITATION OF BRIDGE NO. 04581
TIMES FARM ROAD OVER
THE HOP RIVER

TOWN: ANDOVER

DRAWING TITLE:
LANDSCAPE DESIGN PLAN

PROJECT NO. 01-105
DRAWING NO. LDS-1
SHEET NO. 27

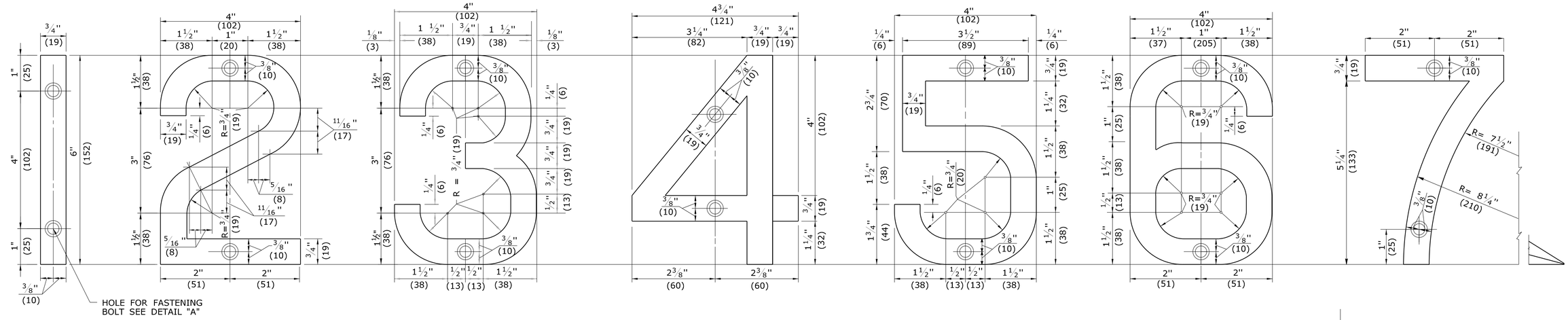

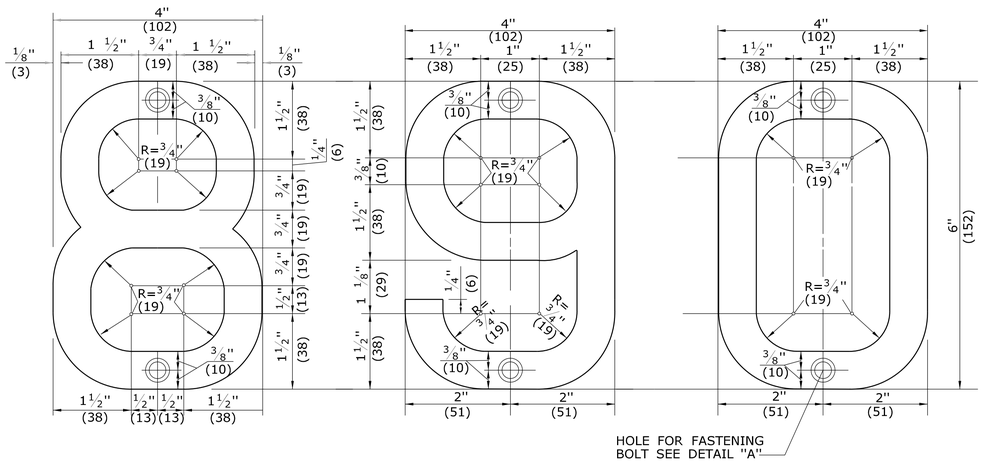

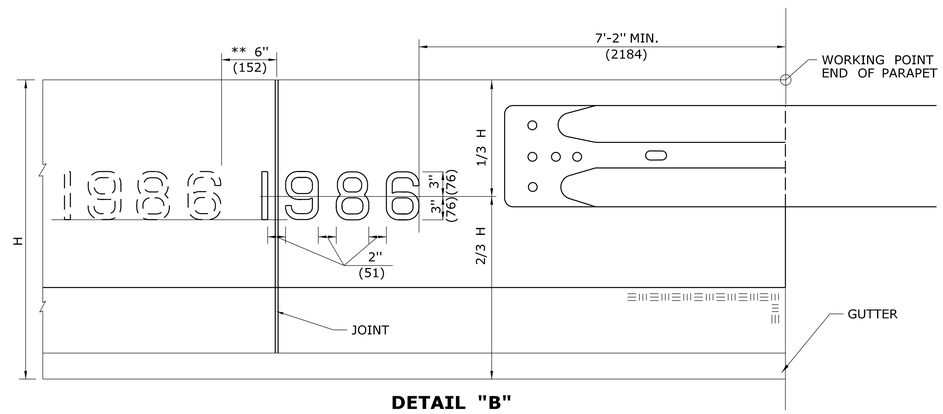

DETAIL "B"

DATE LOCATION ON PARAPET

NOTE:
**WHERE A JOINT INTERFERES, PLACE FIGURES FOR DATE 6"(152) TO THE LEFT OF JOINT AS INDICATED. WHERE THE END OF GUIDERAIL ELEMENT INTERFERS, PLACE FIGURES FOR DATE 6"(152) TO THE LEFT OF THE END OF RAIL ELEMENT.
H = PARAPET HEIGHT AT END - WORKING POINT

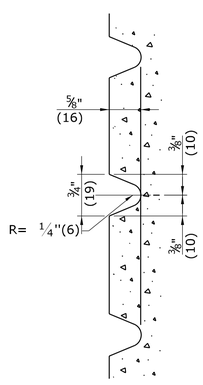

TYPICAL SECTION THROUGH FIGURES

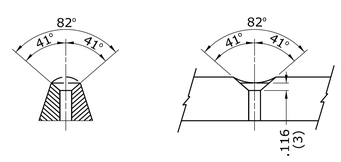

DRILL HOLE WITH #9 DRILL & COUNTERSINK FOR STD. 3/16"(5) - 24th FLATHEAD STOVE BOLT OR #10 - 24th FLATHEAD MACHINE SCREW.

DETAIL "A"

HOLE FOR FASTENING BOLT

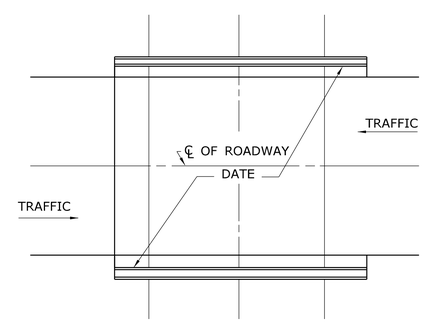

TWO WAY TRAFFIC

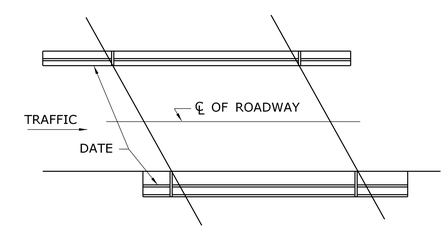

ONE WAY TRAFFIC

TYPICAL PLAN OF BRIDGE SHOWING LOCATION OF DATE AT COMPLETION

ALL METRIC DIMENSIONS ARE IN MILLIMETERS (mm) UNLESS OTHERWISE NOTED

REV.	DATE	REVISION DESCRIPTION
1	6/11	REVISE MIN. LENGTH OF GUIDERAIL ATTACHMENT
-	-	-
-	-	-
-	-	-
-	-	-
-	-	-

THE INFORMATION, INCLUDING ESTIMATED QUANTITIES OF WORK, SHOWN ON THESE SHEETS IS BASED ON LIMITED INVESTIGATIONS BY THE STATE AND IS IN NO WAY WARRANTED TO INDICATE THE CONDITIONS OF ACTUAL QUANTITIES OF WORK WHICH WILL BE REQUIRED.

Plotted Date: 5/10/2011

NOT TO SCALE

STATE OF CONNECTICUT
DEPARTMENT OF TRANSPORTATION

Filename: CTDOT_HIGHWAY_STD_JUNE2011.dgn Model: 16 - HW-601_01

SUBMITTED BY: NAME/DATE/TIME:

APPROVED BY: NAME/DATE/TIME:

CTDOT
STANDARD SHEET

OFFICE OF ENGINEERING

STANDARD SHEET TITLE:

FIGURES FOR DATES ON BRIDGE PARAPETS

STANDARD SHEET NO.:

HW-601_01

GENERAL NOTES:

1. ALTERNATE DESIGNS FOR LIFTING KEYS, HOLES OR OTHER HANDLING DEVICES MAY BE SUBMITTED TO THE ENGINEER FOR APPROVAL.
2. EXPECTED PERMANENT DYNAMIC DEFLECTION IS 3'-6" (1148) BASED ON TL-3 CRASH TESTS WITH 240' (73152) OF TPCBC.

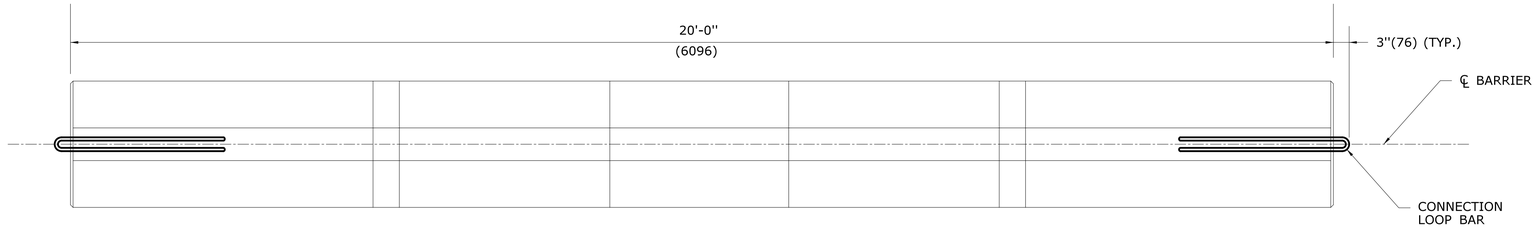

PLAN

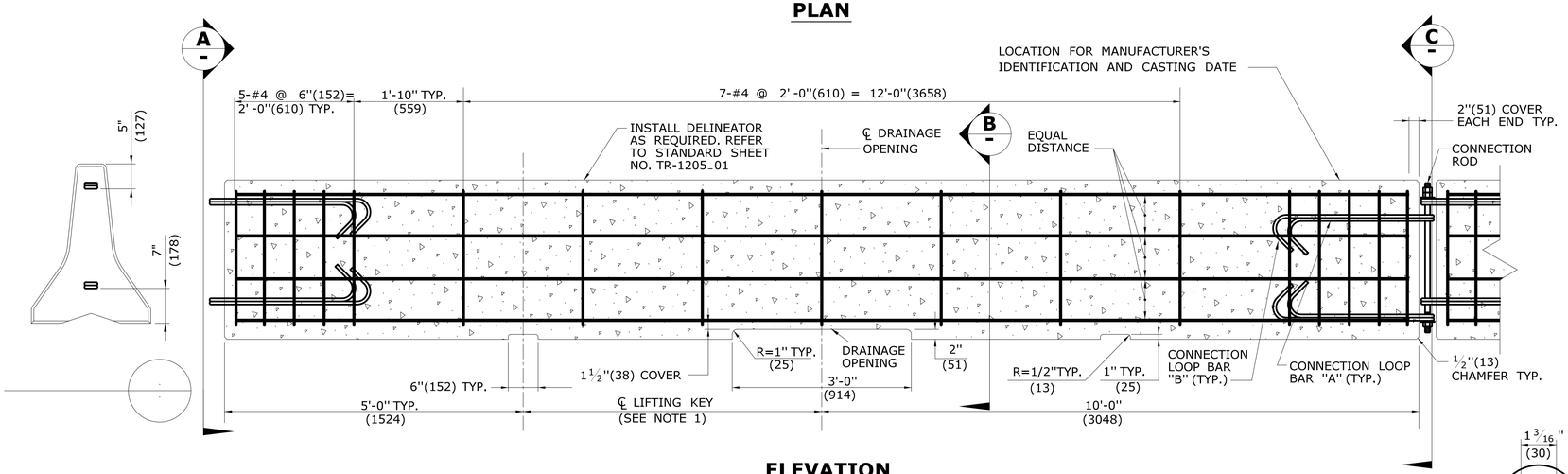

ELEVATION

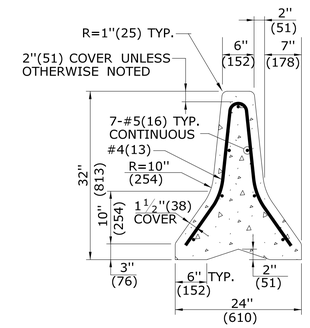

SECTION B

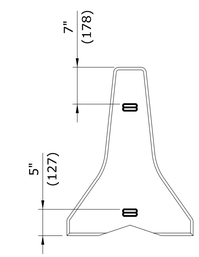

END VIEW C

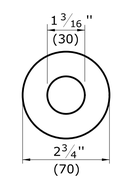

WASHER DETAIL

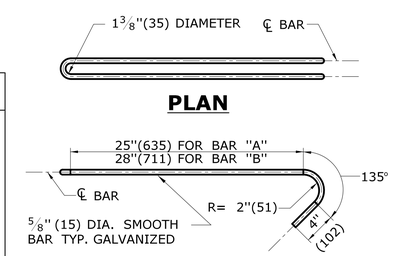

PLAN

ELEVATION

BAR "A" = 6'-0"(1829) TOTAL
BAR "B" = 6'-6"(1981) TOTAL

CONNECTION LOOP BAR

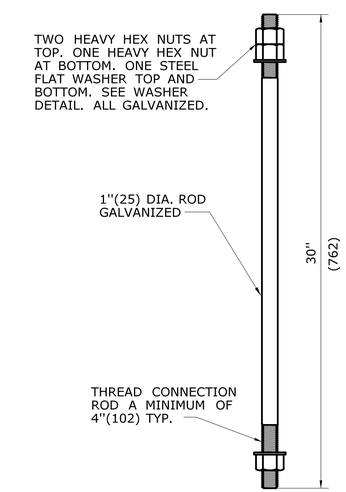

CONNECTION ROD

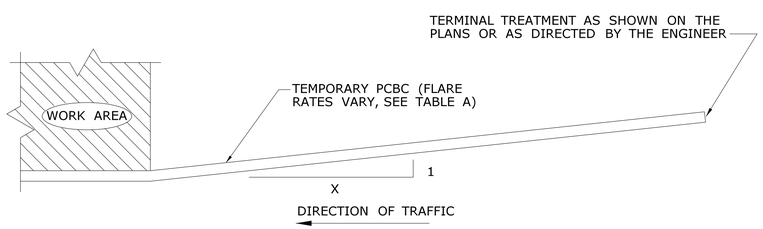

PLAN - TYPICAL INSTALLATION

TABLE A

FLARE RATES

* SPEED	FLARE RATE (X : 1)
≤ 30MPH(48KPH)	4 : 1
> 30MPH(48KPH) <45MPH(72KPH)	6 : 1
≥ 45MPH(72KPH) NON-LIMITED ACCESS HIGHWAYS	8 : 1
ALL LIMITED ACCESS HIGHWAYS	10 : 1

* DESIGN SPEED THROUGH THE WORK AREA.

ALL METRIC DIMENSIONS ARE IN MILLIMETERS (mm) UNLESS OTHERWISE NOTED.

1	3/12	REVISE SLOPE NOTE & DETAIL NOTE	
2	7/13	ERRATA	-
-	-	-	-
-	-	-	-
-	-	-	-
-	-	-	-
-	-	-	-

THE INFORMATION, INCLUDING ESTIMATED QUANTITIES OF WORK, SHOWN ON THESE SHEETS IS BASED ON LIMITED INVESTIGATIONS BY THE STATE AND IS IN NO WAY WARRANTED TO INDICATE THE CONDITIONS OF ACTUAL QUANTITIES OF WORK WHICH WILL BE REQUIRED.

NOT TO SCALE

STATE OF CONNECTICUT
DEPARTMENT OF TRANSPORTATION

NAME/DATE/TIME:

APPROVED BY: NAME/DATE/TIME:

CTDOT STANDARD SHEET

OFFICE OF ENGINEERING

TEMPORARY PRECAST CONCRETE BARRIER CURB

HW-822_01

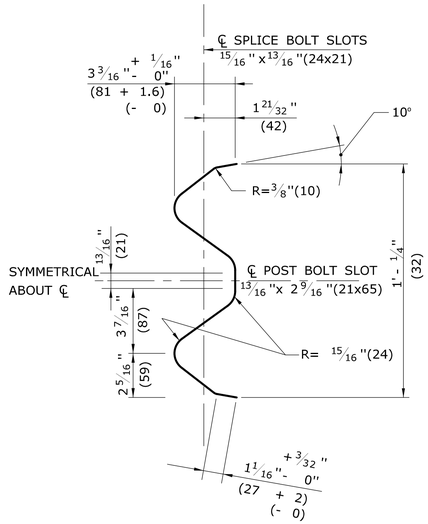

SELECTION THRU RAIL ELEMENT END VIEW

NOTE: ALL DIMENSIONS SUBJECT TO MANUFACTURING TOLERANCES

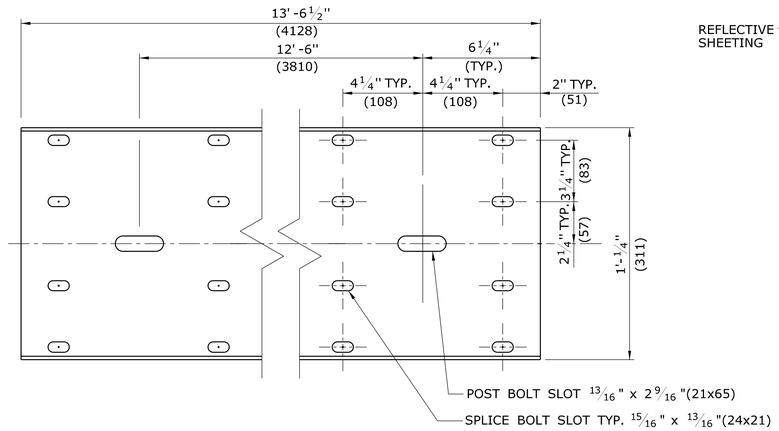

TYPICAL W-BEAM RAIL ELEMENT CLASS A, TYPE II

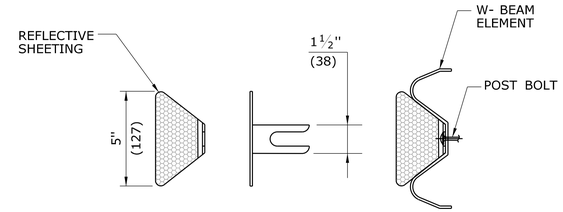

DELINEATOR DETAIL

GENERAL NOTES:

1. NEW R-B 350 GUIDERAIL INCLUDING SYSTEMS, ANCHORS AND TRANSITIONS INSTALLED ON EXPRESSWAYS AND RAMPS SHALL USE CLASS B TYPE II (10 GAUGE) W-BEAM RAIL ELEMENTS.
2. W6x9 (W150x14) POSTS MAY BE USED IN PLACE OF W6 x 8.5(W150x13) POSTS.
3. W8x13 (W200x19) POSTS, 7'-6"(2286) LONG, ARE USED WITH TRANSITIONS TO VERTICAL OR SAFETY SHAPE PARAPETS (POSTS 1 AND 2) AND SYSTEM 6.
4. W6x8.5 (W150x13) POSTS, 6'-0"(1829) LONG, ARE USED WITH TRANSITIONS TO VERTICAL OR SAFETY SHAPE PARAPETS (POSTS 3 THOUGH 6), MD-B 350, SYSTEM 5 & 5A, AND STANDARD R-B 350 GUIDERAIL.

DELINEATOR NOTES:

1. DELINEATORS SHALL BE FORMED OF .080 POLY-CARBONATE OR .080 SHEET ALUMINUM IN ACCORDANCE WITH M.18.13.
2. REFLECTIVE SHEETING SHALL CONFORM TO M.18.09.2.
3. DELINEATORS SHALL BE INSTALLED ON THE POST CLOSEST TO THE DESIGNATED SPACING.
4. REFLECTIVE SHEETING SHALL BE WHITE EXCEPT ON THE LEFT SIDE OF DIVIDED STREETS, HIGHWAYS, RAMPS, AND ONE WAY ROADS IN THE DIRECTION OF TRAVEL WHERE IT SHALL BE YELLOW.
5. INSTALL DELINEATORS ON RAIL THAT IS PARALLEL TO AND NOT GREATER THAN 6'(1829) FROM THE EDGE OF THE ROADWAY. A MINIMUM OF THREE DELINEATORS MUST BE INSTALLED ON ANY RUN OF RAIL.

DELINEATOR SPACING:
RADIUS ≥ 300'(91440) - SPACE EVERY 50'(15.24m)
RADIUS < 300'(91440) - SPACE EVERY 25'(7.62m)

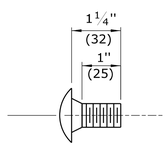

W-BEAM SPLICE BOLT DETAIL

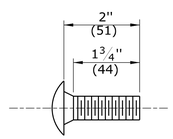

POST BOLT DETAIL FOR R-B 350 SYSTEM 6 RUBRAIL

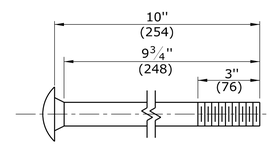

POST BOLT DETAIL FOR R-B 350 AND MD-B 350 GUIDERAIL

(UNTHREADED PORTION NOT TO EXCEED 6 3/4"(171))

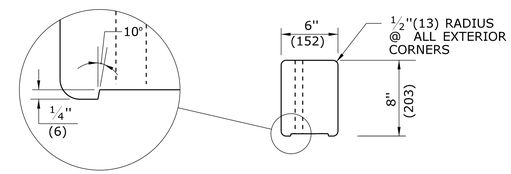

PLAN

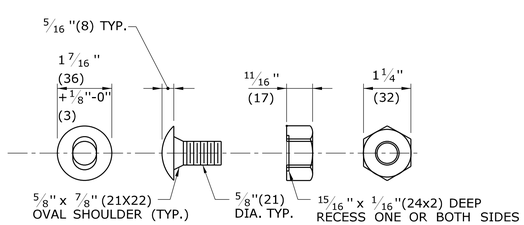

BUTTONHEAD BOLT **HEX NUT**

NOTE: AFTER GALVANIZING, THE NUT SHALL BE FREE RUNNING ON THE BOLT. DIAMETER SHOWN IS TYPICAL FOR ALL GUIDERAIL BOLTS. SEE DETAILS ABOVE FOR SPECIFIC LENGTHS.

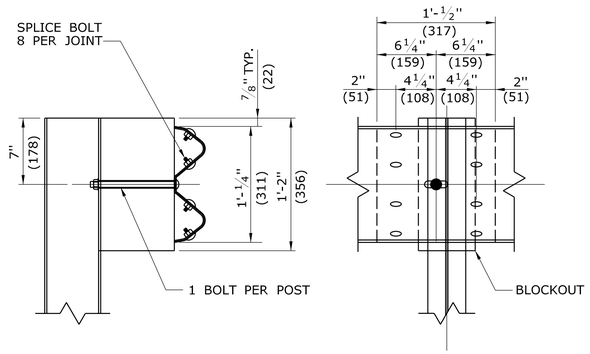

SECTION **ELEVATION**

LAP DETAIL

NOTE:
LAP RAIL SECTION IN DIRECTION OF TRAFFIC

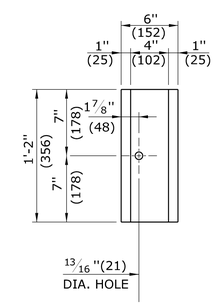

ELEVATION

R-B 350 PLASTIC BLOCKOUT DETAIL

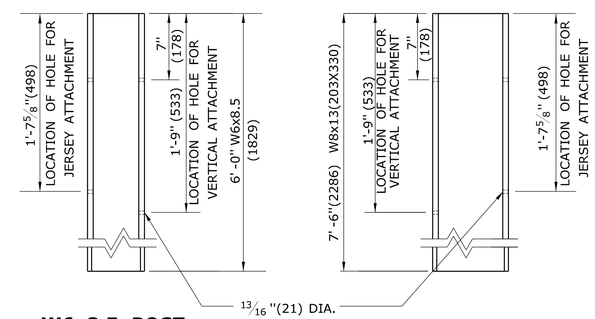

W6x8.5 POST (W150x13) 6'-0"(1829) LONG

W8x13 POST (W200x19) 7'-6"(2286) LONG

BOLT HOLE LAYOUT FOR W8x13(W200x19) AND W6x8.5 (W150x13)UNIFORM POST

(REFER TO GENERAL NOTES)

ALL METRIC DIMENSIONS ARE IN MILLIMETERS (mm) UNLESS OTHERWISE NOTED.

REV.	DATE	REVISION DESCRIPTION
1	6/11	REMOVE WEATHERING STEEL NOTES
-	-	-
-	-	-
-	-	-
-	-	-
-	-	-

THE INFORMATION, INCLUDING ESTIMATED QUANTITIES OF WORK, SHOWN ON THESE SHEETS IS BASED ON LIMITED INVESTIGATIONS BY THE STATE AND IS IN NO WAY WARRANTED TO INDICATE THE CONDITIONS OF ACTUAL QUANTITIES OF WORK WHICH WILL BE REQUIRED.

Plotted Date: 5/10/2011

NOT TO SCALE

STATE OF CONNECTICUT
DEPARTMENT OF TRANSPORTATION

Filename: CTDOT_HIGHWAY_STD_JUNE2011.dgn Model: 36-HW-910_01

SUBMITTED BY: NAME/DATE/TIME:

APPROVED BY: NAME/DATE/TIME:

CTDOT STANDARD SHEET

OFFICE OF ENGINEERING

STANDARD SHEET TITLE:

W-BEAM METAL BEAM RAIL HARDWARE

STANDARD SHEET NO.: HW-910_01

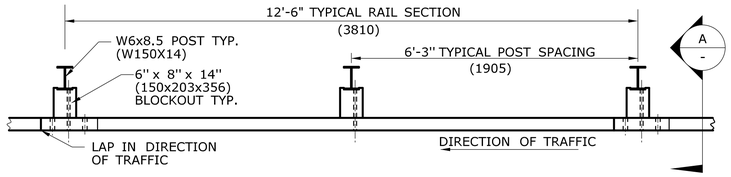

PLAN

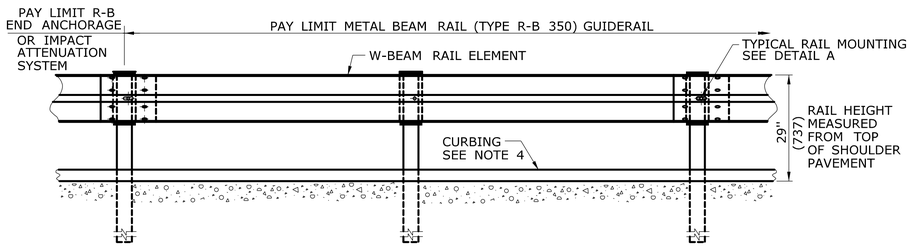

ELEVATION

METAL BEAM RAIL (TYPE R-B 350)

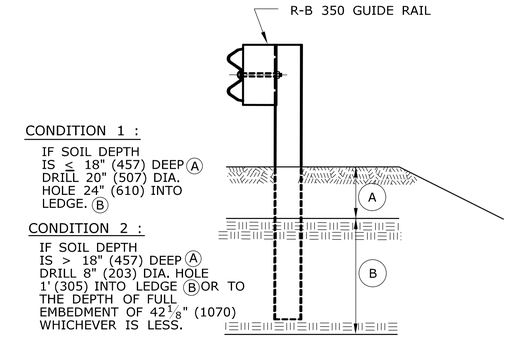

ELEVATION

(SEE NOTE 8)

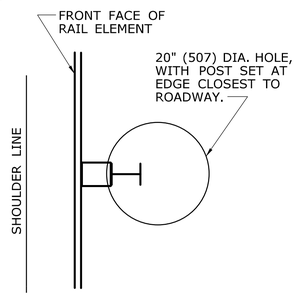

PLAN
CONDITION 1

(SEE NOTE 8)

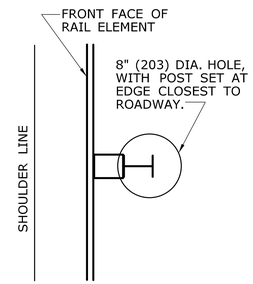

PLAN
CONDITION 2

(SEE NOTE 8)

DRILLING IN ROCK FOR GUIDERAIL POSTS

GENERAL NOTES:

1. SEE SHEET HW-910_01 FOR HARDWARE AND DELINEATOR DETAILS.
2. MAXIMUM DESIGN DEFLECTION FOR R-B 350 GUIDERAIL AT THE STANDARD POST SPACING OF 6'-3"(1905) IS 4'-3"(1295). DEFLECTION REQUIREMENT IS MEASURED FROM THE BACK OF POST TO THE FACE OF OBJECT.
3. FOR CURVES WITH RADII OF 150'(45.7m) OR LESS, ALL RAIL ELEMENTS SHALL BE SHOP FABRICATED TO THE PROPER RADIUS AND GALVANIZED AFTER FABRICATION. RADIUS RAIL WHEN REQUIRED AND NOTED ON THE PLANS, IS INCLUDED IN THE PAY ITEM FOR GUIDERAIL.
4. RAIL HEIGHT WITH CURBING SHALL BE MEASURED FROM THE TOP OF PAVEMENT. ON HIGH SPEED ROADWAYS (≥45mph 72.4kph), 4"(102) CURBING MAY BE USED IN CONJUNCTION WITH GUIDERAIL AND THE RAIL ELEMENT SHALL BE PLACED FLUSH WITH THE FACE OF CURB. ON LOW SPEED ROADWAYS (<45mph 72.4kph), 6"(152) CURBING MAY BE USED IN CONJUNCTION WITH GUIDERAIL AND THE RAIL ELEMENT SHALL BE PLACED A MAXIMUM OF 9"(229) BEHIND THE FACE OF CURB.
5. THREE BLOCKOUTS MAY BE USED FOR ONE POST ONLY. TWO BLOCKOUTS MAY BE USED FOR A SERIES OF POSTS. THE COST OF ADDITIONAL BLOCKOUTS AND LONGER BOLTS SHALL BE INCLUDED IN THE BID PRICE PER FOOT OF GUIDERAIL. EXTRA BLOCKOUTS AT TRANSITION TO BRIDGE PARAPETS SHOULD BE AVOIDED.
6. W-BEAM GUIDERAIL MAY BE PLACED 1' (305) OR MORE FROM THE EDGE OF PAVEMENT ONLY ON SLOPES 10:1 OR FLATTER AND WITHOUT CURBING. IF THE RAIL IS INSTALLED WITHIN 2'(610) OF THE EDGE OF PAVEMENT, THE RAIL HEIGHT IS MEASURED FROM THE SHOULDER SLOPE EXTENDED TO THE RAIL. IF THE RAIL IS INSTALLED BEYOND 2'(610) FROM THE EDGE OF PAVEMENT, THE RAIL HEIGHT IS MEASURED FROM THE GROUND DIRECTLY BELOW THE RAIL.
7. ALL R-B 350 GUIDERAIL TYPES INSTALLED ON EXPRESSWAYS AND RAMPS SHALL USE CLASS B, TYPE-II (10 GAUGE) W-BEAM RAIL ELEMENTS.
8. 20" (507) DIA. EXCAVATED HOLE SHALL BE BACKFILLED WITH SUITABLE MATERIAL, OR GRANULAR FILL COMPACTED IN 6" (150) LIFTS BEFORE DRIVING POST OR POSTS MAY BE SET IN EXCAVATED HOLE AND BACKFILLED WITH CONTROLLED LOW STRENGTH MATERIAL (CLSM). 8" (203) DIA. HOLE SHALL BE BACKFILLED WITH SUITABLE MATERIAL.
9. AS DIRECTED BY THE ENGINEER AND WHERE PAVEMENT FOR RAILING IS NOT BEING INSTALLED, A MIN. 6" DEPTH OF PROCESSED AGGREGATE SHALL BE INSTALLED FROM THE PAVEMENT EDGE OR BACK OF CURB TO A MINIMUM OF 2' (610) BEHIND THE GUIDERAIL POST AND COMPACTED IN 6" (150) LIFTS.
10. MINIMUM RAIL HEIGHT FOR NEW CONSTRUCTION SHALL BE 29" (737) ± 1" (25).

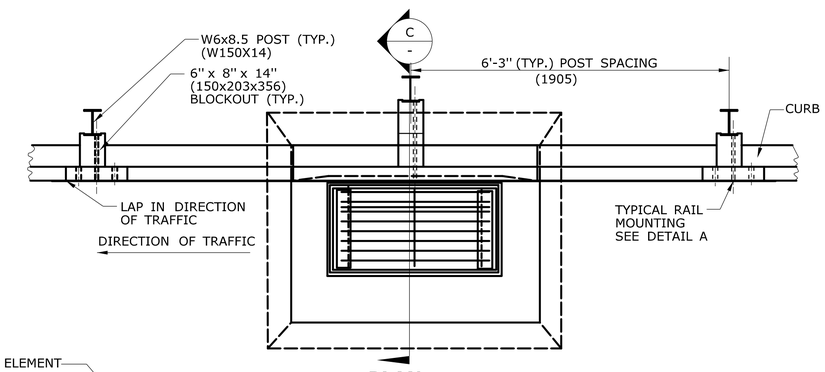

PLAN

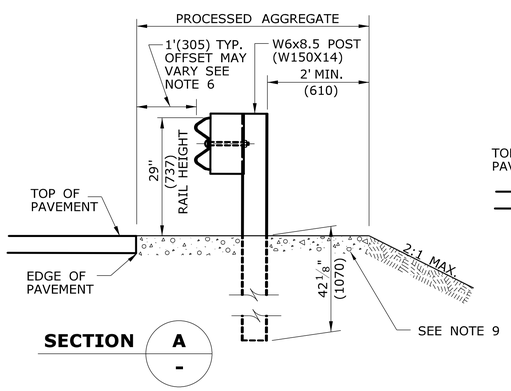

SECTION A -

NO CURB APPLICATION

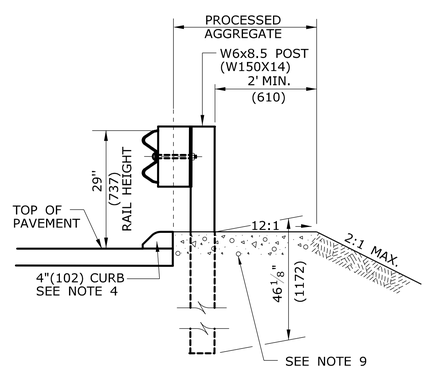

SECTION A -

CURB APPLICATION

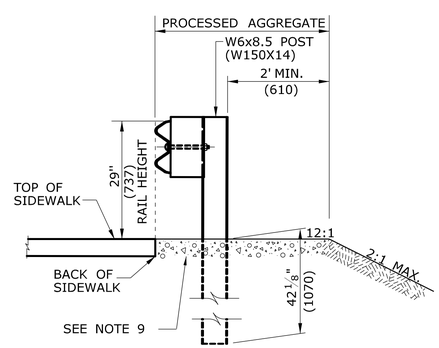

SECTION A -

SIDEWALK APPLICATION

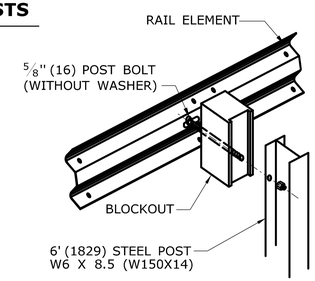

DETAIL A
RAIL MOUNTING

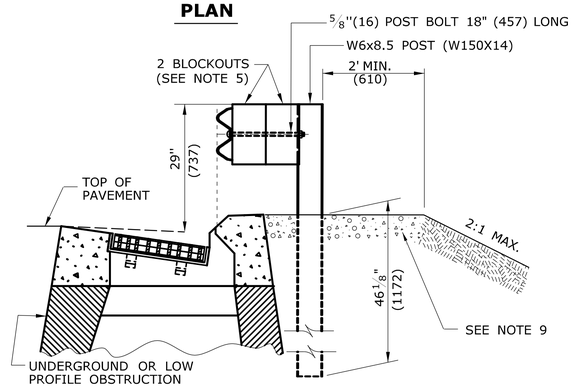

SECTION C -

MULTIPLE BLOCKOUT APPLICATION (MAY BE USED TO AVOID UNDERGROUND OR LOW PROFILE OBSTRUCTION)

ALL METRIC DIMENSIONS ARE IN MILLIMETERS (mm) UNLESS OTHERWISE NOTED.

REV.	DATE	REVISION DESCRIPTION
1	6/11	REVISED NOTE 9 FOR USE OF PROCESSED AGGREGATE -
		AND REMOVED NOTE 6 FOR WEATHERING STEEL -
-	-	- -
-	-	- -
-	-	- -
-	-	- -

THE INFORMATION, INCLUDING ESTIMATED QUANTITIES OF WORK, SHOWN ON THESE SHEETS IS BASED ON LIMITED INVESTIGATIONS BY THE STATE AND IS IN NO WAY WARRANTED TO INDICATE THE CONDITIONS OF ACTUAL QUANTITIES OF WORK WHICH WILL BE REQUIRED.

Plotted Date: 5/10/2011

NOT TO SCALE

STATE OF CONNECTICUT
DEPARTMENT OF TRANSPORTATION

Filename: CTDOT_HIGHWAY_STD_JUNE2011.dgn Model: 37- HW-910_02

SUBMITTED BY: NAME/DATE/TIME:

APPROVED BY: NAME/DATE/TIME:

CTDOT
STANDARD SHEET

OFFICE OF ENGINEERING

STANDARD SHEET TITLE:

METAL BEAM RAIL (TYPE R-B 350) GUIDERAIL

STANDARD SHEET NO.:

HW-910_02

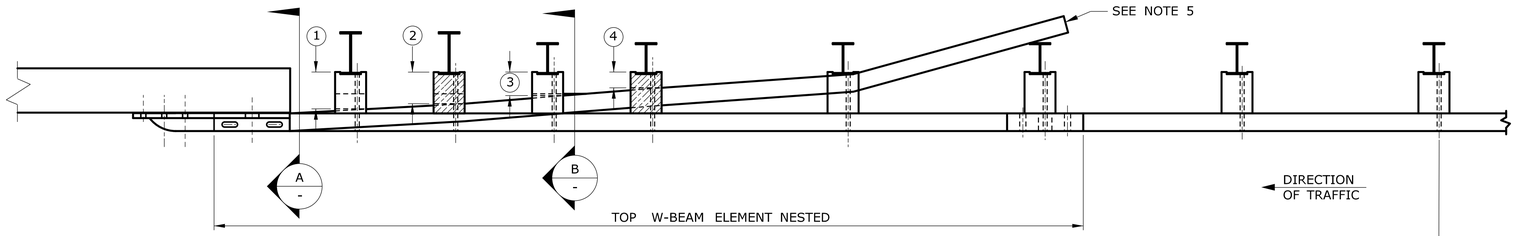

PLAN

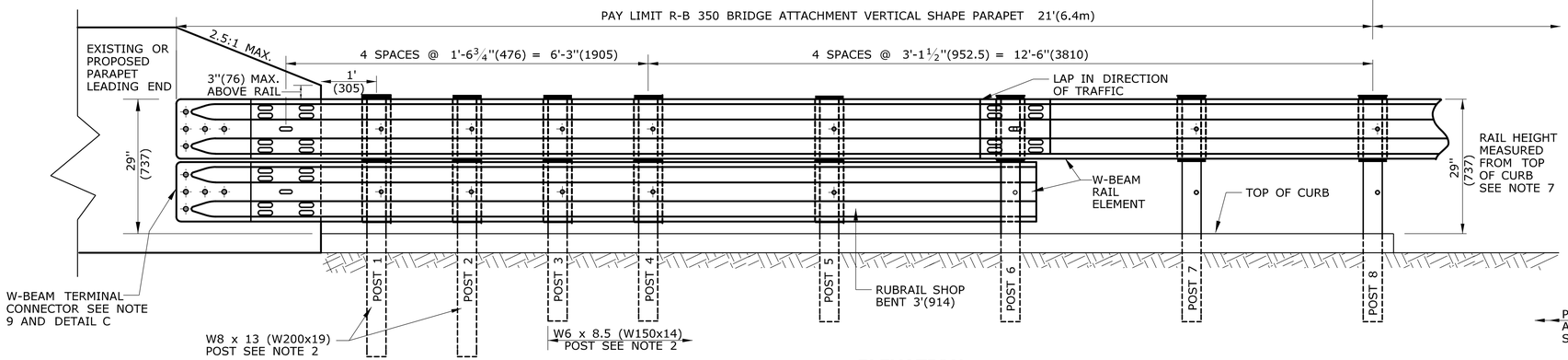

ELEVATION

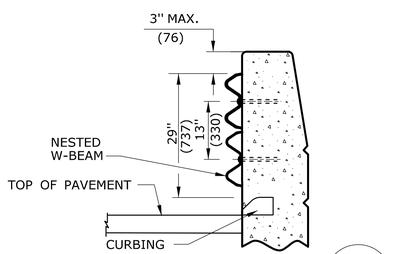

SECTION A -

WITH CURBING

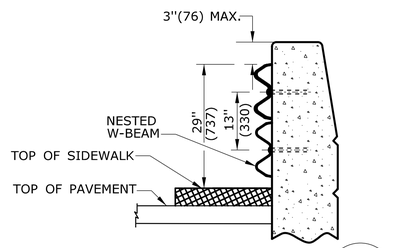

SECTION A -

WITH SIDEWALK

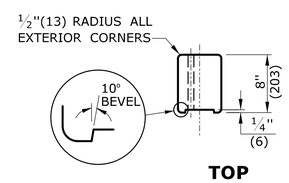

TOP

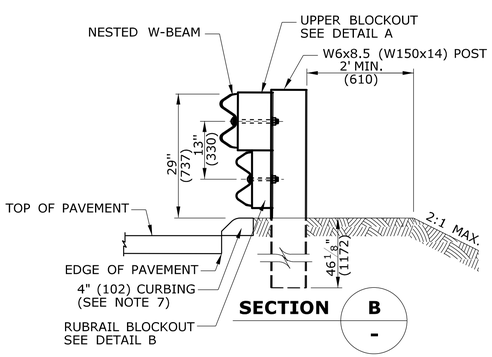

SECTION B -

WITH CURBING

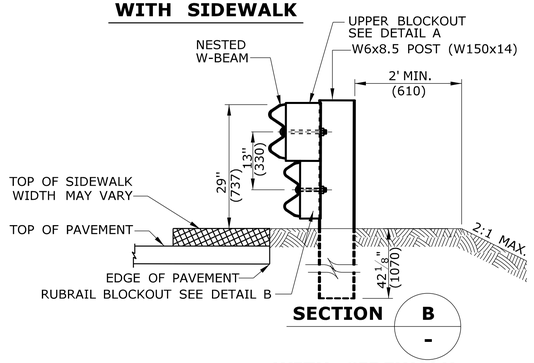

SECTION B -

WITH SIDEWALK

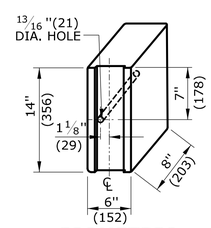

ISOMETRIC

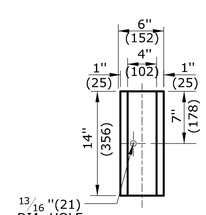

FRONT

DETAIL A

UPPER BLOCKOUT

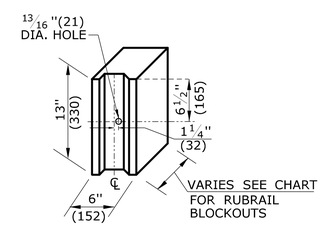

DETAIL B

RUBRAIL BLOCKOUT

RUBRAIL BLOCKOUTS 13"(330)HIGH x 6"(152)WIDE		
POST	THICKNESS	BOLT LENGTH
1	7"(178)	9"(229)
2	6"(152)	8"(203)
3	4½"(114)	6"(152)
4	3"(76)	5"(127)

GENERAL NOTES:

1. THIS R-B 350 GUIDERAIL TRANSITION IS APPROPRIATE FOR CONNECTION AT THE FOLLOWING LOCATIONS:
   (A) WHEN ANY SAFETY SHAPE (F-SHAPED OR JERSEY SHAPE) PARAPET HAS AN ELECTRICAL JUNCTION BOX WITHIN 8' (2438) OF THE END OF THE PARAPET, THE END OF THE PARAPET SHALL BE MODIFIED OR TRANSFORMED TO A VERTICAL SHAPE PRIOR TO GUIDERAIL ATTACHMENT.
   (B) VERTICAL WALL OR ABUTMENT FACE.
   (C) VERTICAL CONCRETE PARAPET WITH SIDEWALK.
   (D) VERTICAL FACE FOR LEADING AND TRAILING ENDS ON DUAL DIRECTION ROADWAYS.
2. POSTS 1 AND 2 ARE W8 x 13(W200x19), 7'-6" (2286) LONG. ALL OTHER POSTS IN TRANSITION ARE W6 x 8.5(W150x14), 6' (1829) LONG.
3. POSTS 1 THROUGH 5 REQUIRE AN ADDITIONAL HOLE TO ATTACH LOWER BLOCKOUTS AND/OR LOWER RUBRAIL.
4. RUBRAIL BLOCKOUTS FOR POSTS 1 THROUGH 4 ARE ATTACHED TO POST AND RAIL WITH A ⅝" (16) BUTTONHEAD BOLTS (SEE CHART FOR BOLT LENGTH). RUBRAIL ONLY IS ATTACHED TO POST 5 WITH A ⅝" x 1¼" (16 x 32) BUTTONHEAD BOLT.
5. THE RUBRAIL MAY BE SHOP BENT IN THE LAST 3' (914) TO FACILITATE INSTALLATION. DO NOT ATTACH RUBRAIL TO BACK OF POST 6.
6. USE CLASS B (10 GAUGE) TYPE II W-BEAM RAIL ELEMENTS FOR INSTALLATIONS ON EXPRESSWAYS AND RAMPS.
7. FOR THIS APPLICATION WHEN CURBING IS USED, R-B 350 RAIL HEIGHT MUST BE MEASURED FROM THE TOP OF CURBING TO THE TOP OF RAIL. SEE DETAIL D FOR HEIGHT TRANSITION.
8. FOR NEW CONSTRUCTION WHERE CURBING IS NEEDED, USE EITHER 4" (102) BITUMINOUS CONCRETE PARK CURBING OR PRECAST CONCRETE TRANSITION CURBING SET WITH A 4" (102) REVEAL. THE PREFERRED CURBING FOR HIGH SPEED ROADWAYS (≥45 MPH (72kph)) IS 4" (102). HOWEVER, ON LOW SPEED ROADWAYS (<45 MPH (72kPH)) A 6" (152) CURBING MAY BE USED. ADJUST RAIL HEIGHT AS REQUIRED.
9. ANCHORAGE:
   (A) AT EXISTING PARAPETS EACH W-BEAM TERMINAL CONNECTOR SHALL BE ANCHORED USING FOUR ⅞" x 12" (22 x 305) CHEMICALLY ANCHORED BOLTS WITH WASHERS OR AS DETAILED ON STRUCTURE SHEETS. MAXIMUM BOLT PROJECTION BEYOND THE NUT SHALL BE ½" (13). THE 12" (305) MINIMUM LENGTH OF CHEMICALLY ANCHORED BOLTS SHALL INCLUDE A MINIMUM EMBEDMENT DEPTH OF 10" (254) INTO SUITABLY REINFORCED CONCRETE OR AS RECOMMENDED BY THE MANUFACTURER OF BONDING MATERIAL.
   (B) FOR NEW PARAPETS OR BARRIERS, THE W-BEAM TERMINAL CONNECTORS SHALL BE ANCHORED AS DETAILED ON THE STRUCTURE SHEETS.
10. ADDITIONAL BLOCKOUTS WITH POSTS 1 THROUGH 6 SHOULD BE AVOIDED.
11. FOR SINGLE DIRECTION ROADWAY:
    INSTALL W-BEAM TERMINAL CONNECTOR BETWEEN NESTED GUIDERAIL ELEMENTS.
    FOR DUAL DIRECTION ROADWAY FOR APPROACHING TRAFFIC:
    INSTALL W-BEAM TERMINAL CONNECTOR BETWEEN NESTED GUIDERAIL ELEMENTS.
    FOR TRAILING END:
    INSTALL W-BEAM TERMINAL CONNECTOR OUTSIDE OF THE NESTED GUIDERAIL ELEMENTS.
12. MINIMUM RAIL HEIGHT FOR NEW CONSTRUCTION SHALL BE 29" (737) ± 1" (25).

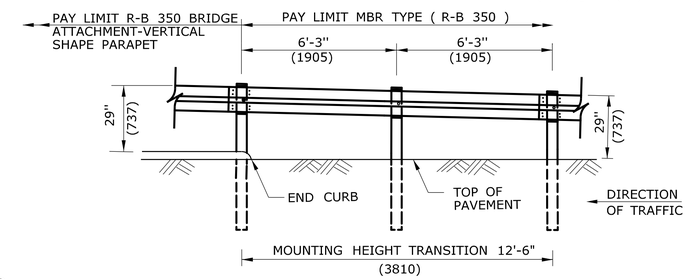

DETAIL D

HEIGHT TRANSITION

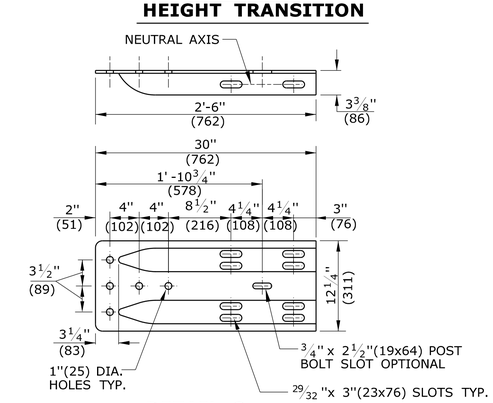

DETAIL C

W-BEAM TERMINAL CONNECTOR

CLASS B TYPE II

SEE NOTE 11

ALL METRIC DIMENSIONS ARE IN MILLIMETERS (mm) UNLESS OTHERWISE NOTED.

REV.	DATE	REVISION DESCRIPTION	
1	6/11	REVISED NOTE 9 FOR USE OF CHEMICAL ANCHORS	-
-	-	-	-
-	-	-	-
-	-	-	-
-	-	-	-
-	-	-	-

THE INFORMATION, INCLUDING ESTIMATED QUANTITIES OF WORK, SHOWN ON THESE SHEETS IS BASED ON LIMITED INVESTIGATIONS BY THE STATE AND IS IN NO WAY WARRANTED TO INDICATE THE CONDITIONS OF ACTUAL QUANTITIES OF WORK WHICH WILL BE REQUIRED.

Plotted Date: 5/10/2011

NOT TO SCALE

STATE OF CONNECTICUT
DEPARTMENT OF TRANSPORTATION

Filename: CTDOT_HIGHWAY_STD_JUNE2011.dgn Model: 42 - HW-910_07

SUBMITTED BY: NAME/DATE/TIME:

APPROVED BY: NAME/DATE/TIME:

CTDOT STANDARD SHEET

OFFICE OF ENGINEERING

STANDARD SHEET TITLE:

R-B 350 BRIDGE ATTACHMENT VERTICAL SHAPE PARAPET

STANDARD SHEET NO.:

HW-910_07

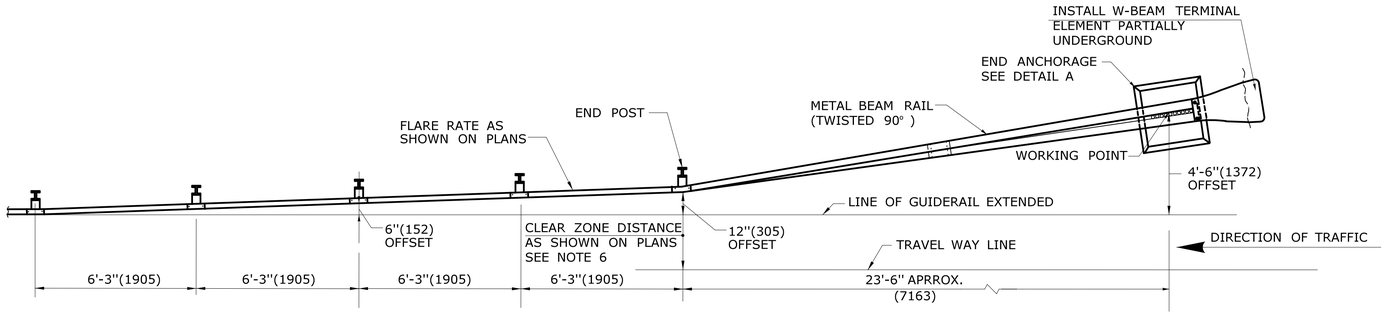

PLAN

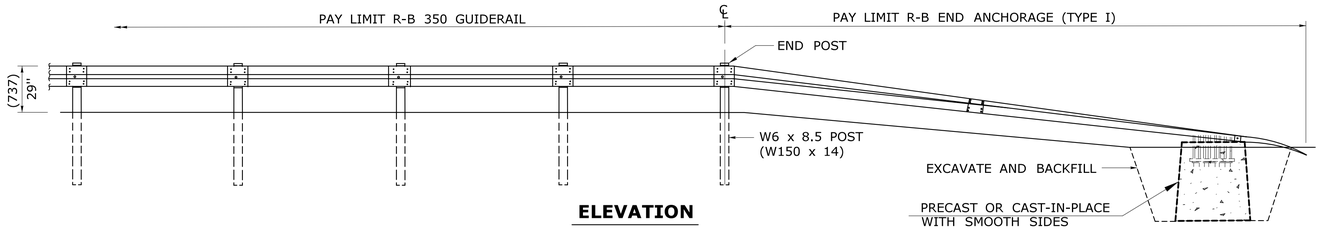

ELEVATION

R-B END ANCHORAGE TYPE I (ROADSIDE APPLICATION)

GENERAL NOTES:

1. R-B END ANCHORAGE TYPE I INSTALLED ON FREEWAYS AND RAMPS SHALL USE CLASS B (10 GAUGE) TERMINAL AND W-BEAM RAIL ELEMENTS. ALL OTHER R-B END ANCHORAGE TYPE I SHALL USE CLASS A (12 GAUGE) TERMINAL AND W-BEAM RAIL ELEMENTS.
2. R-B END ANGHORAGE TYPE II SHALL USE CLASS A (12 GAUGE) TERMINAL AND W-BEAM RAIL ELEMENTS.
3. OTHER RADII WHICH CAN BE DEMONSTRATED TO PROVIDE THE INSTALLATIONS SHOWN FOR END ANCHORAGE TYPE II MAY BE APPROVED.
4. J-HOOK BOLTS MAY BE SUBSTITUTED FOR BOTTOM PLATE ANCHORAGE IN CONCRETE END ANCHORS USING THE SAME SIZE, STRENGTH, AND LENGTH AS NOTED ON THE PLANS.
5. MINIMUM RAIL HEIGHT FOR NEW CONSTRUCTION SHALL BE 29" (737) + 1'(25).
6. R-B TYPE I END ANCHOR: INSTALL LEADING END USING DESIGN CLEAR ZONE DISTANCE MEASURED FROM TRAVEL WAY LINE TO END POST AS SHOWN ON PLANS, THEN PLACE CONCRETE ANCHOR 4'-6"(1372) FROM THE LINE OF GUIDERAIL EXTENSION. INSTALL TRAILING END ON DUAL DIRECTION ROADWAYS IN THE SAME MANNER EXCEPT MEASURE CLEAR ZONE FROM THE DOUBLE YELLOW LINE. INSTALL TRAILING END ON SINGLE DIRECTION ROADWAYS MEASURED FROM THE GUIDERAIL LINE EXTENDED AND OFFFSET 4'-6" (1372).

   R-B TYPE II END ANCHOR: INSTALL ONLY ON ROADWAYS WITH DESIGN SPEEDS < 45mph (72kph). FOR DUAL DIRECTION ROADWAYS, INSTALL IN THE SAME MANNER AS TYPE I END ANCHOR FOR BOTH LEADING AND TRAILING END USING DESIGN CLEAR ZONE DISTANCE EXCEPT PLACE CONCRETE ANCHOR 2'-4" (711) MEASURED FROM THE LINE OF GUIDERAIL EXTENDED. INSTALL TRAILING END ON SINGLE DIRECTION ROADWAYS MEASURED FROM THE GUIDERAIL LINE EXTENDED AND OFFSET 2'-4" (711).
7. SEE HW-911_04 FOR TYPICAL END ANCHOR GRADING PLAN.

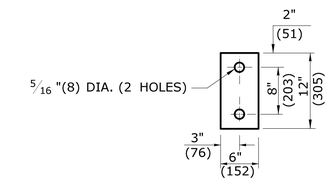

DETAIL B

TYPE 2 OBJECT MARKER

SIGN # 51-5030

OBJECT MARKER FACE SHALL BE YELLOW TYPE III RETROREFLECTORIZED. THE BOTTOM OF TYPE 2 OBJECT MARKER SHALL BE 4'(1219) ABOVE GROUND LEVEL MOUNTED ON METAL DELINEATOR POST. IT SHALL BE USED TO IDENTIFY CULVERT ENDS AND TYPE II END ANCHORS, OR AS DIRECTED BY THE ENGINEER.

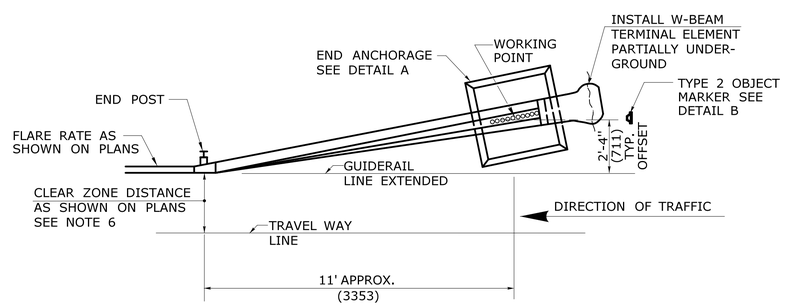

PLAN

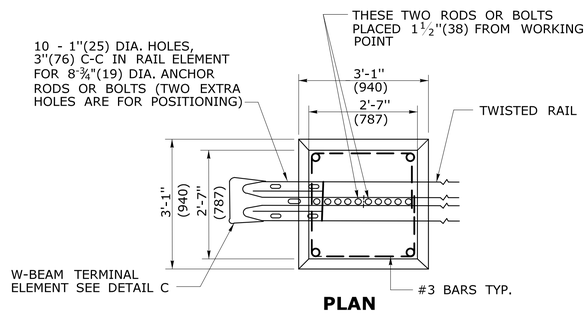

PLAN

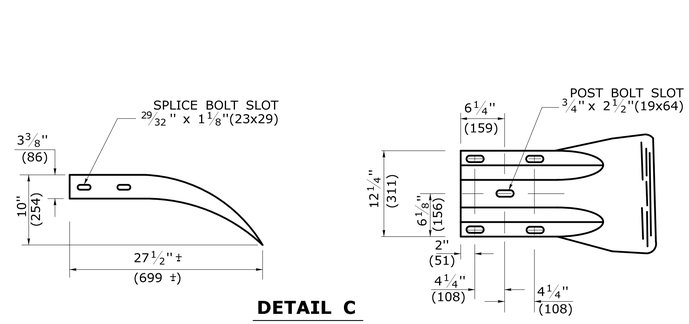

DETAIL C

W-BEAM TERMINAL ELEMENT

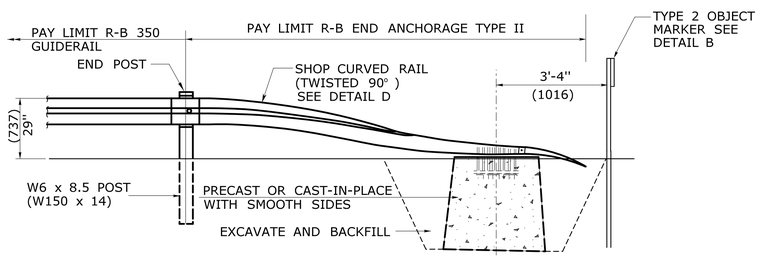

ELEVATION

R-B END ANCHORAGE TYPE II

SEE NOTE 2

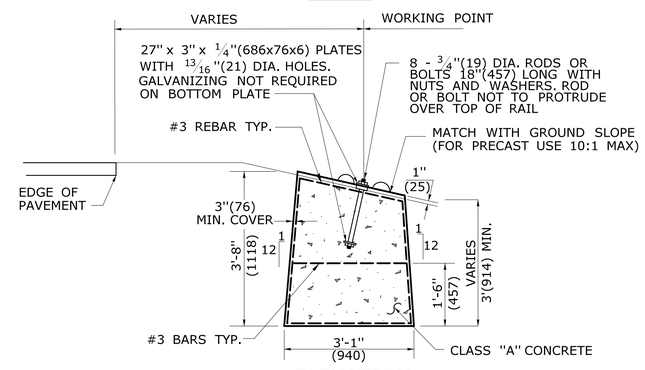

ELEVATION

DETAIL A

ROADSIDE CONCRETE END ANCHOR

SEE NOTE 4

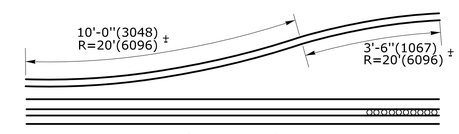

DETAIL D

SHOP CURVED RAIL

SEE NOTE 3

ALL METRIC DIMENSIONS ARE IN MILLIMETERS (mm) UNLESS OTHERWISE NOTED.

REV.	DATE	REVISION DESCRIPTION
1	6/11	REVISED TYPE I AND II ANCHOR FOR CLEAR ZONE PLACEMENT
2	7/13	ADD POST OFFSET DISTANCE -
-	-	- -
-	-	- -
-	-	- -
-	-	- -

THE INFORMATION, INCLUDING ESTIMATED QUANTITIES OF WORK, SHOWN ON THESE SHEETS IS BASED ON LIMITED INVESTIGATIONS BY THE STATE AND IS IN NO WAY WARRANTED TO INDICATE THE CONDITIONS OF ACTUAL QUANTITIES OF WORK WHICH WILL BE REQUIRED.

Plotted Date: 6/13/2013

NOT TO SCALE

STATE OF CONNECTICUT
DEPARTMENT OF TRANSPORTATION

Filename: CTDOT_HIGHWAY_STD2013.dgn Model: 70 - HW-911_01

SUBMITTED BY: NAME/DATE/TIME:

APPROVED BY: NAME/DATE/TIME:

CTDOT STANDARD SHEET

OFFICE OF ENGINEERING

STANDARD SHEET TITLE:

R-B END ANCHORAGE TYPE I AND II

STANDARD SHEET NO.:

HW-911_01

GENERAL NOTES:

1. DRIVEWAY ENTRANCE SHALL BE A MINIMUM OF 12' (3658) WIDE, EXCLUDING CURBING WHEN PRESENT.
2. SIDEWALK RAMPS SHALL BE A MINIMUM OF 36" (914) TO 40" (1016) MAXIMUM, WITH A MAXIMUM SLOPE OF 12:1. THERE SHALL BE NO LIP AT THE DRIVEWAY SIDEWALK INTERFACE.
3. WELDED WIRE FABRIC MATS WITH REINFORCING AT CLOSER SPACING MAY BE USED.

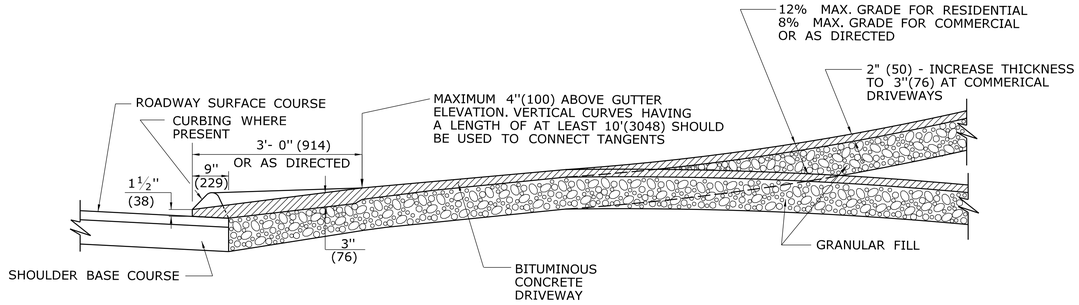

SECTION A

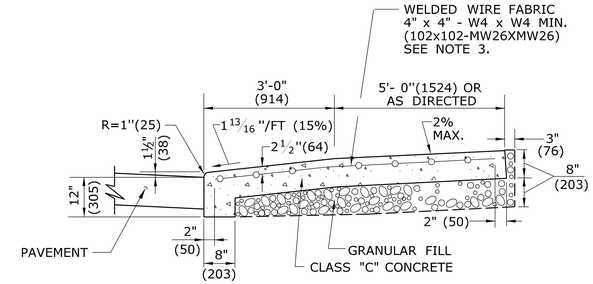

SECTION C

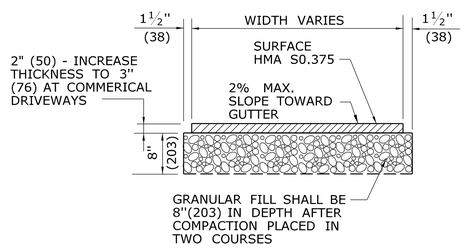

TYPICAL SECTION
BITUMINOUS CONCRETE SIDEWALK AND DRIVE

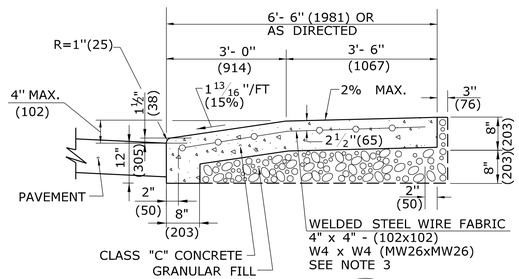

SECTION B

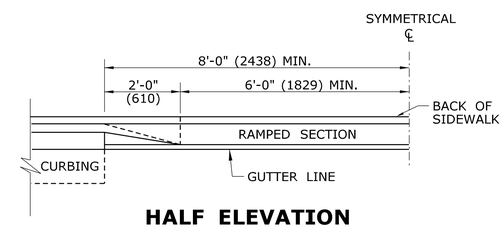

HALF ELEVATION

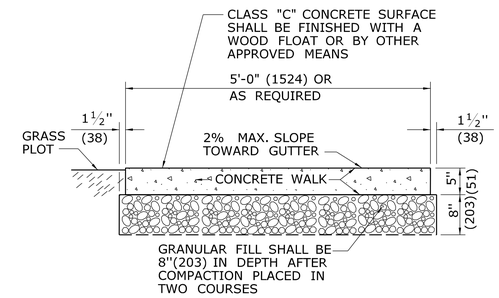

SECTION D

5' (1524) WIDE CONCRETE SIDEWALK WITH GRASS PLOT

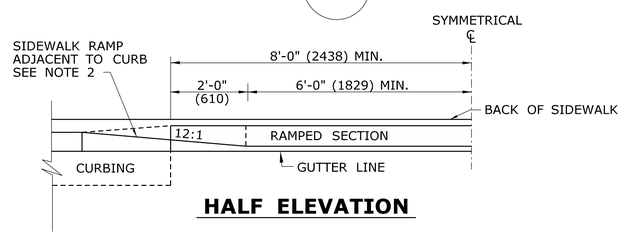

HALF ELEVATION

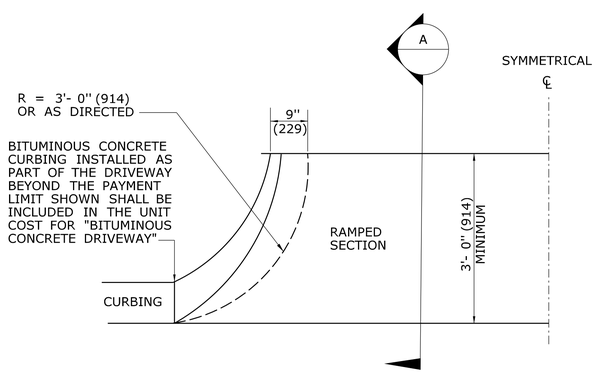

HALF BITUMINOUS CONCRETE DRIVEWAY PLAN

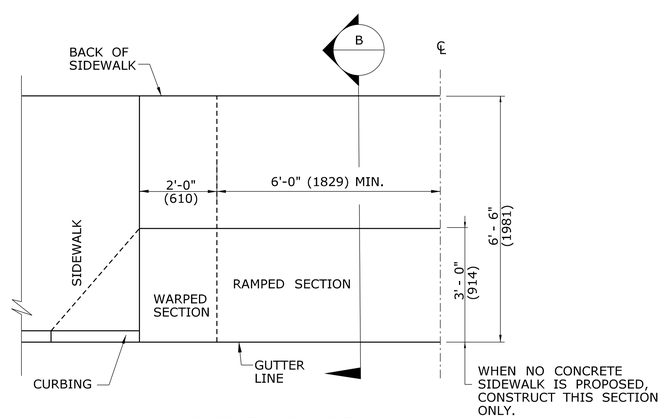

HALF PLAN OF CONCRETE DRIVEWAY RAMP WHERE SIDEWALK ADJOINS CURBING

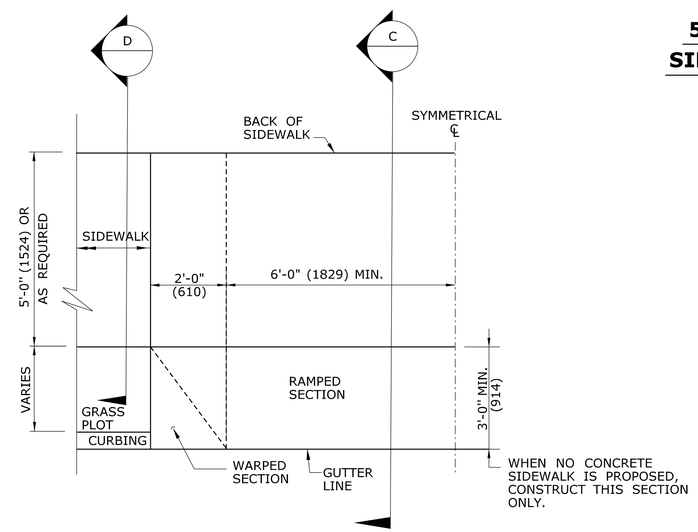

HALF PLAN OF CONCRETE DRIVEWAY RAMP WHERE CURB IS SEPARATED FROM SIDEWALK BY GRASS PLOT

ALL METRIC DIMENSIONS ARE IN MILLIMETERS (mm) UNLESS OTHERWISE NOTED

REV.	DATE	REVISION DESCRIPTION
1	6/01/10	REVISED BORDER TITLE
2	6/01/10	REVISED HALF ELEVATION DETAILS
3	1/12	REVISE 2% MAX. SLOPE NOTE
-	-	-
-	-	-
-	-	-

THE INFORMATION, INCLUDING ESTIMATED QUANTITIES OF WORK, SHOWN ON THESE SHEETS IS BASED ON LIMITED INVESTIGATIONS BY THE STATE AND IS IN NO WAY WARRANTED TO INDICATE THE CONDITIONS OF ACTUAL QUANTITIES OF WORK WHICH WILL BE REQUIRED.

Plotted Date: 1/9/2012

NOT TO SCALE

STATE OF CONNECTICUT
DEPARTMENT OF TRANSPORTATION

Filename: Jan2012.dgn Model: HW-921_01

SUBMITTED BY: NAME/DATE/TIME:

APPROVED BY: NAME/DATE/TIME:

CTDOT STANDARD SHEET

OFFICE OF ENGINEERING

STANDARD SHEET TITLE: DRIVEWAY RAMPS AND SIDEWALKS

STANDARD SHEET NO.: HW-921_01

GENERAL NOTES:

1. PAVEMENT FOR RAILING SHALL BE USED ONLY AT THE FOLLOWING LOCATIONS:
   - A) WITHIN A MAPPED AQUIFER PROTECTION AREA.
   - B) AT THE APPROACHES TO BRIDGES OVER STREAMS AND RIVERS FOR A MINIMUM LENGTH OF 50'(15m).
   - C) WHEN THE RIVER OR STREAM IS LESS THAN 50'(15m) FROM THE EDGE OF ROAD AND PARALLELING IT.
   - D) WITHIN OR ABUTTING WATER COMPANY OWNED AREA.
2. WHEN PAVEMENT FOR RAILING IS NOT REQUIRED, PROCESSED AGGREGATE SHALL BE USED UNDER RAILING. SEE HW-910_02 AND 03.

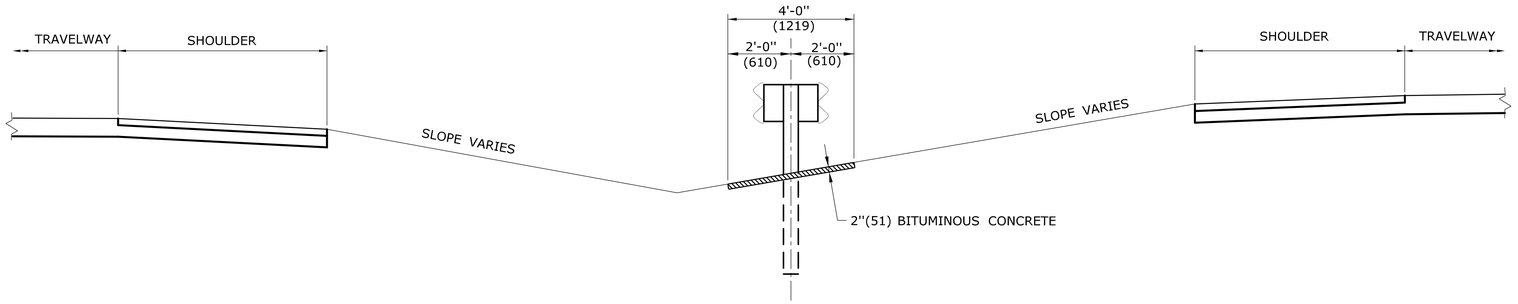

MEDIAN SECTION

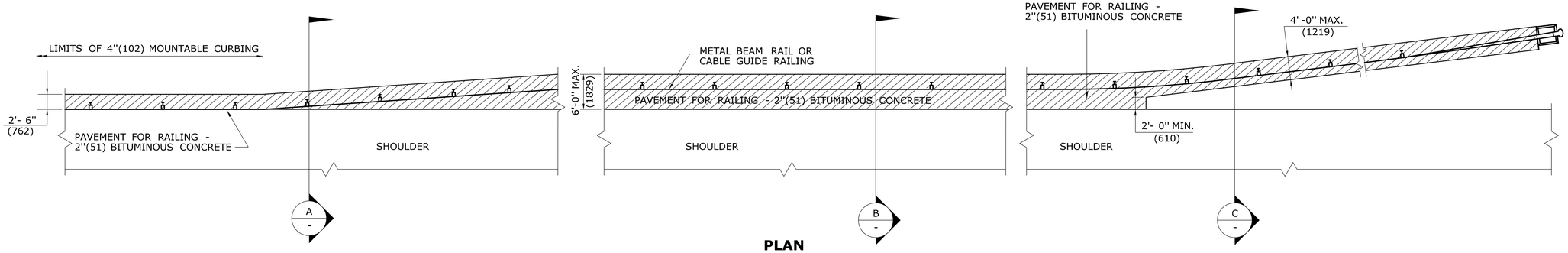

PLAN

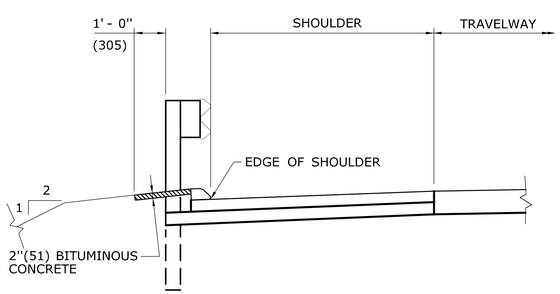

SECTION A -

RAIL WITH 4"(102) MOUNTABLE CURBING

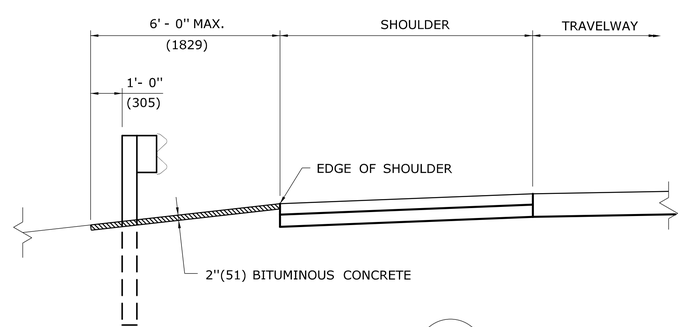

SECTION B -

RAIL WITHOUT CURBING

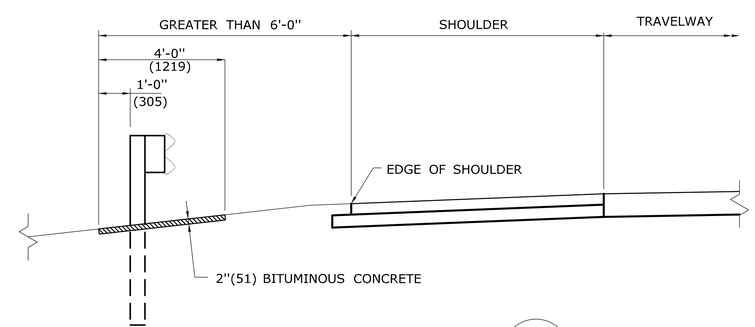

SECTION C -

TRANSITION OR OFFSET RAIL

TYPICAL CROSS SECTIONS

ALL METRIC DIMENSIONS ARE IN MILLIMETERS (mm) UNLESS OTHERWISE NOTED

REV.	DATE	REVISION DESCRIPTION
1	6/11	REVISED NOTES FOR LOCATION TO USE PAVEMENT FOR RAIL
-	-	-
-	-	-
-	-	-
-	-	-
-	-	-

THE INFORMATION, INCLUDING ESTIMATED QUANTITIES OF WORK, SHOWN ON THESE SHEETS IS BASED ON LIMITED INVESTIGATIONS BY THE STATE AND IS IN NO WAY WARRANTED TO INDICATE THE CONDITIONS OF ACTUAL QUANTITIES OF WORK WHICH WILL BE REQUIRED.

Plotted Date: 5/10/2011

NOT TO SCALE

STATE OF CONNECTICUT
DEPARTMENT OF TRANSPORTATION

Filename: CTDOT_HIGHWAY_STD_JUNE2011.dgn Model: 70 - HW-925_01

SUBMITTED BY: NAME/DATE/TIME:

APPROVED BY: NAME/DATE/TIME:

CTDOT
STANDARD SHEET

OFFICE OF ENGINEERING

STANDARD SHEET TITLE:

PAVEMENT FOR RAILING

STANDARD SHEET NO.:

HW-925_01

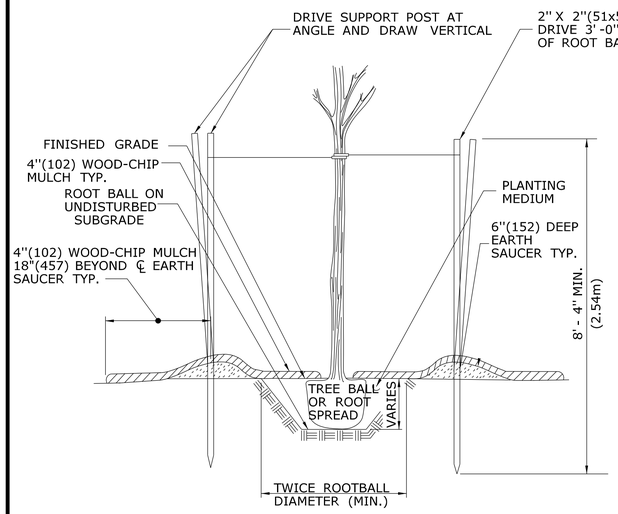

SECTION A

NOTE:

USE 3 POSTS FOR STAKING DECIDUOUS TREES 3"(76) CALIPER OR GREATER AND EVERGREEN TREES 8'(2.4m) HIGH OR GREATER. USE 2 POSTS FOR STAKING DECIDUOUS TREES LESS THAN 3"(76) CALIPER AND EVERGREEN TREES LESS THAN 8'(2.4m) HIGH.

GUYING PLAN

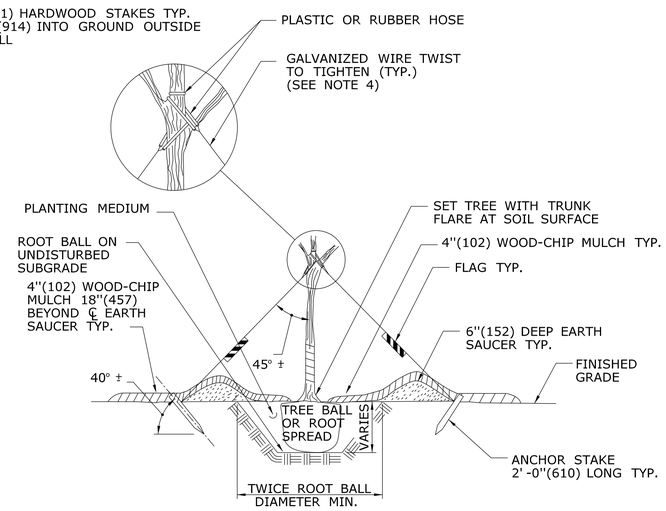

SECTION B

EXAMPLES OF MINIMUM SIZE OF ROOT BALL FOR NURSERY GROWN PLANTS.

CALIPER* INCHES(mm)	BALL DIAMETER INCHES(mm)	PLANTING PIT SIZE INCHES(mm)
-	8(203)	16(406)
-	10(254)	20(508)
½(12.5)	12(304)	24(610)
¾(19)	14(356)	28(711)
1(25)	16(406)	32(813)
1½(38)	20(508)	40(1016)
2(50)	24(610)	48(1219)
2½(65)	28(711)	56(1422)
3(75)	32(813)	64(1626)
3½(90)	38(965)	76(1930)
4(100)	42(1166)	84(2134)
5(125)	54(1372)	108(2743)
6(150)**	-	-

* THE CALIPER OF THE TRUNK IS MEASURED 6"(152) ABOVE THE GROUND UP TO AND INCLUDING 4"(102) SIZES AND 12"(305) ABOVE THE GROUND FOR LARGER SIZES OR AS SPECIFED IN THE MOST RECENT EDITION OF THE AMERICAN STANDARD FOR NURSERY STOCK, PUBLISHED BY THE AMERICAN ASSOCIATION OF NURSERYMEN.

** TREES GREATER THAN OR EQUAL TO 6"(152) CALIPER SHALL HAVE A ROOT BALL DIAMETER EQUAL TO 10"(254) PER INCH(25mm) OF TRUNK CALIPER (A 7"(178) CALIPER TREE SHOULD HAVE A ROOT BALL DIAMETER EQUAL TO 70"(1778)).

GENERAL NOTES:

1. THE PLANTING PIT SIZE SHALL BE TWICE THE DIAMETER OF THE ROOT BALL IN WIDTH AND 2"(51) LESS THAN THE HEIGHT OF THE ROOT BALL.
2. ALL EXTERIOR PACKAGING MATERIAL APPLIED TO PLANTS SHALL BE REMOVED AFTER THE PLANT IS LOCATED IN THE PLANTING PIT. CUT AND REMOVE TWINE, BURLAP OR WIRE BASKETS FROM THE TOP 2/3RDS OF THE ROOT BALL.
3. USE DOUBLE STRAND NO. 12 WIRE FOR DECIDUOUS TREES GREATER THAN OR EQUAL TO 3"(76) CALIPER AND USE DOUBLE STRAND NO. 10 WIRE FOR EVERGREEN TREES GREATER THAN OR EQUAL TO 8"(203) CALIPER.
4. TREE TRUNK WRAPPING MATERIAL SHALL BE USED AS DIRECTED BY THE ENGINEER.
5. PLANTING PITS FOR INDIVIDUAL SHRUBS ON SLOPES SHALL BE THREE TIMES THE DIAMETER OF THE ROOT BALL IN WIDTH.

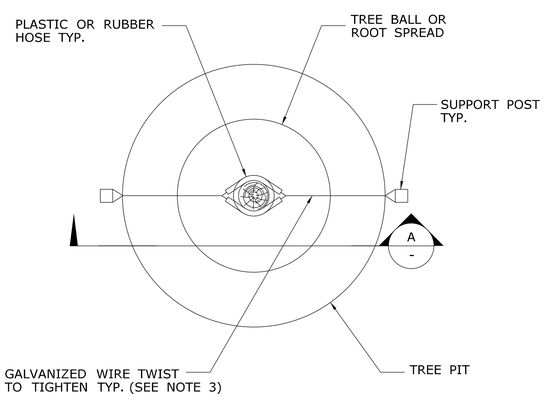

PLAN

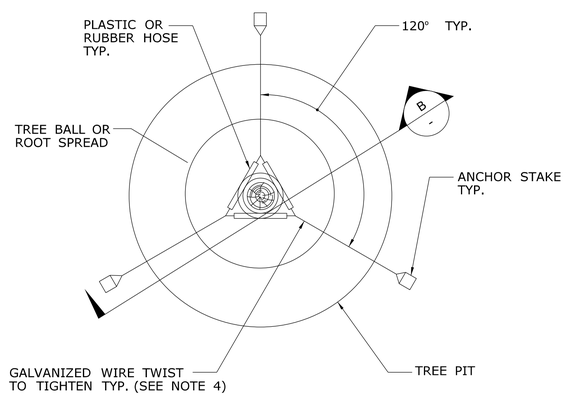

PLAN

STAKING PLAN

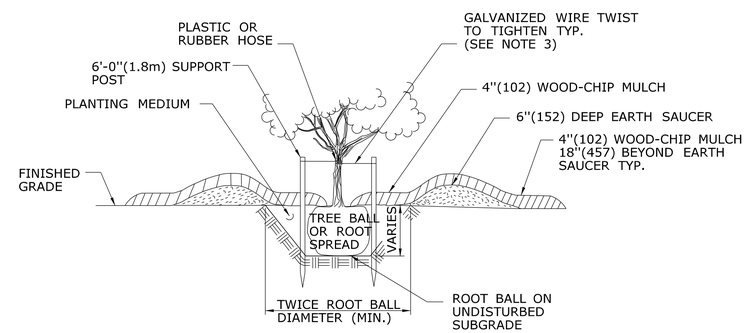

SECTION C

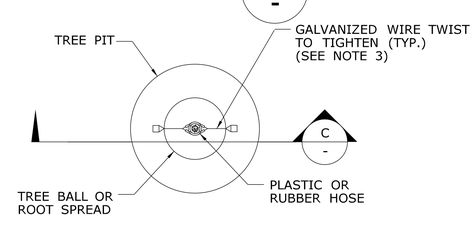

PLAN

STAKING PLAN FOR LOW BRANCHING DECIDUOUS AND EVERGREEN TREES FROM 5'(1.5m) TO 8'(2.4m) HIGH.

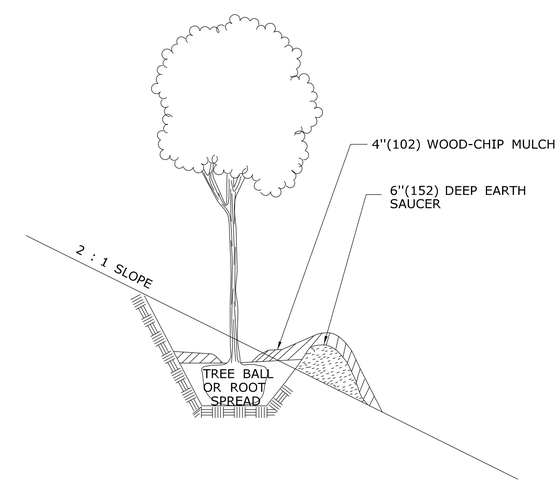

GRADING PLAN FOR TREES ON SLOPES

ALL METRIC DIMENSIONS ARE IN MILLIMETERS (mm) UNLESS OTHERWISE NOTED

REV.	DATE	REVISION DESCRIPTION
-	-	-
-	-	-
-	-	-
-	-	-
-	-	-
-	-	-

THE INFORMATION, INCLUDING ESTIMATED QUANTITIES OF WORK, SHOWN ON THESE SHEETS IS BASED ON LIMITED INVESTIGATIONS BY THE STATE AND IS IN NO WAY WARRANTED TO INDICATE THE CONDITIONS OF ACTUAL QUANTITIES OF WORK WHICH WILL BE REQUIRED.

Plotted Date: 6/23/2011

NOT TO SCALE

STATE OF CONNECTICUT
DEPARTMENT OF TRANSPORTATION

Filename: CTDOT_HIGHWAY_STD_JUNE2011.dgn Model: 71 - HW-949_01

SUBMITTED BY: NAME/DATE/TIME:

APPROVED BY: NAME/DATE/TIME:

CTDOT STANDARD SHEET

OFFICE OF ENGINEERING

STANDARD SHEET TITLE:

PLANTING DETAILS FOR TREES

STANDARD SHEET NO.:

HW-949_01

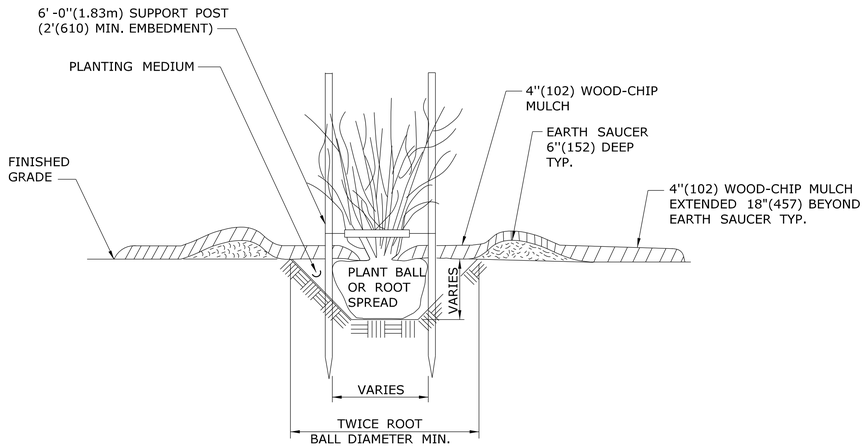

SECTION A -

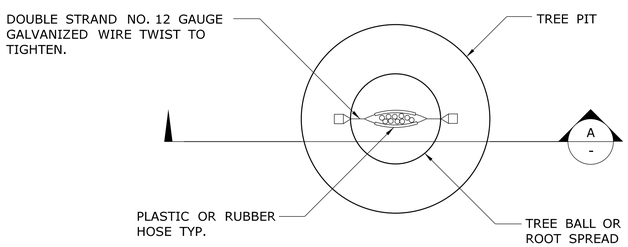

PLAN

STAKING FOR MULTI-STEMMED DECIDUOUS TREES FROM 5'(1.5m) TO 10'(3.0m) HIGH

EXAMPLES OF MINIMUM CONTAINER SIZES FOR NURSERY GROWN PLANTS

CALIPER* INCHES(mm)	HEIGHT** FEET(mm)	CONTAINER SIZE GALLONS(LITERS)
-	1(305)	0.7-1.1(2.6-4.2)
-	2(610)	0.7-1.1(2.6-4.2)
-	3(914)	0.7-1.1(2.6-4.2)
-	4(1219)	1.4-2.0(5.3-7.6)
-	5(1524)	3.4-4.2(12.9-15.9)
-	6(1829)	4.7-5.4(17.8-20.4)
1(25)	7(2134)	5.8-7.8(21.9-29.5)
-	8(2438)	9.0-11.5*34.1-43.5)
1½(38)	-	12.0-16.0(45.4-60.6)
2(51)	-	25.0-29.7(94.6-112.4)
2½(64)	-	25.0-29.7(94.6-112.4)

* THE CALIPER IS MEASURED 4''(102) ABOVE GROUND LEVEL.

** ONLY DECIDUOUS SHRUBS ARE INCLUDED IN THIS TABLE. EVERGREEN SHRUBS ARE MEASURED BY HEIGHT BUT, CONTAINER SIZE DEPENDS ON BOTH SIZE AND SHAPE AND ARE GENERALLY 1 TO 2 SIZES LARGER THAN DECIDUOUS PLANTS.

TABLE FOR SHRUBS

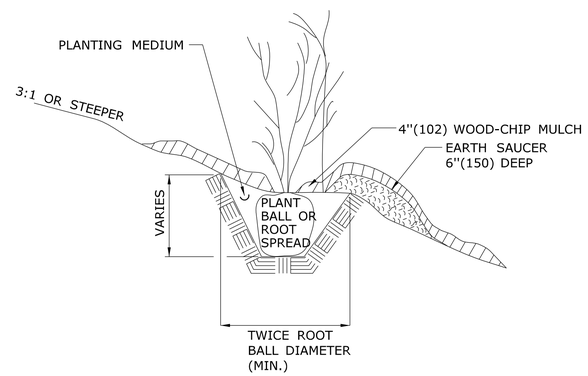

SECTION

PLANTING FOR SHRUBS IN INDIVIDUAL PITS ON SLOPES

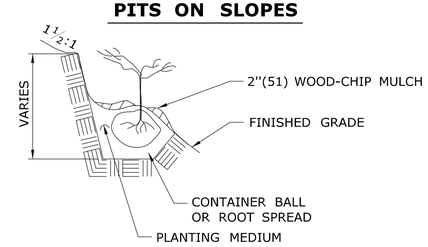

NOTE: PLACE PLANTS AT THE SAME DEPTH THAT THE SEEDLING WAS GROWN IN THE NURSERY.

PLANTING FOR SEEDLINGS, VINES AND GROUND COVER PLANTS IN PITS ON SLOPES

GENERAL NOTES:

1. THE PLANTING PIT SIZE SHALL BE TWICE THE DIAMETER OF THE ROOT BALL IN WIDTH AND 2''(51) LESS THAN THE HEIGHT OF THE ROOT BALL.
2. ALL EXTERIOR PACKAGING MATERIAL APPLIED TO PLANTS SHALL BE REMOVED AFTER THE PLANT IS LOCATED IN THE PLANTING PIT. CUT AND REMOVE TWINE, BURLAP OR WIRE BASKETS FROM THE TOP 2/3RDS (17) OF THE ROOT BALL.
3. USE DOUBLE STRAND NO. 12 WIRE FOR DECIDUOUS TREES GREATER THAN OR EQUAL TO 3''(76) CALIPER AND USE DOUBLE STRAND NO. 10 WIRE FOR EVERGREEN TREES GREATER THAN OR EQUAL TO 8''(203) CALIPER.
4. TREE TRUNK WRAPPING MATERIAL SHALL BE USED AS DIRECTED BY THE ENGINEER.
5. PLANTING PITS FOR INDIVIDUAL SHRUBS ON SLOPES SHALL BE THREE TIMES THE DIAMETER OF THE ROOT BALL IN WIDTH.

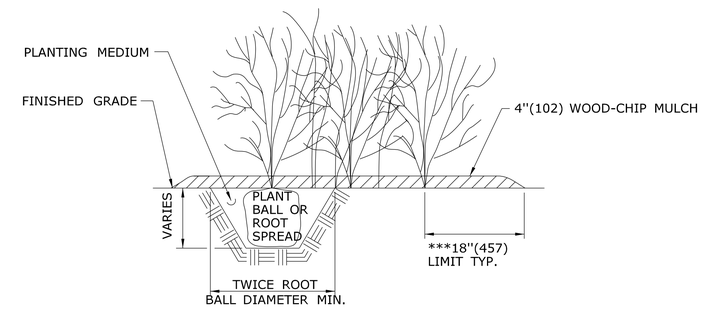

*** UNLESS OTHERWISE DIRECTED, WOOD-CHIP MULCH SHALL BE PLACED TO A LIMIT OF 18''(457) BEYOND THE CENTER OF THE OUTERMOST SHRUBS IN SHRUB BED.

PLANTING FOR SHRUBS IN BEDS

ALL METRIC DIMENSIONS ARE IN MILLIMETERS (mm) UNLESS OTHERWISE NOTED

REV.	DATE	REVISION DESCRIPTION
-	-	-
-	-	-
-	-	-
-	-	-
-	-	-
-	-	-

THE INFORMATION, INCLUDING ESTIMATED QUANTITIES OF WORK, SHOWN ON THESE SHEETS IS BASED ON LIMITED INVESTIGATIONS BY THE STATE AND IS IN NO WAY WARRANTED TO INDICATE THE CONDITIONS OF ACTUAL QUANTITIES OF WORK WHICH WILL BE REQUIRED.

Plotted Date: 6/23/2011

NOT TO SCALE

STATE OF CONNECTICUT
DEPARTMENT OF TRANSPORTATION

Filename: CTDOT_HIGHWAY_STD_JUNE2011.dgn Model: 72 -HW-949_02

SUBMITTED BY: NAME/DATE/TIME:

APPROVED BY: NAME/DATE/TIME:

CTDOT STANDARD SHEET

OFFICE OF ENGINEERING

STANDARD SHEET TITLE:

PLANTING DETAILS FOR SHRUBS

STANDARD SHEET NO.:

HW-949_02

DELINEATORS DE-1, DE-2, DE-3

INSTALLATION ON DELINEATOR POSTS

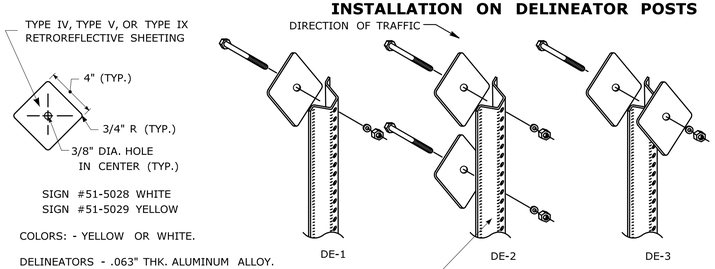

SIGN #51-5028 WHITE
SIGN #51-5029 YELLOW

COLORS: - YELLOW OR WHITE.

DELINEATORS - .063" THK. ALUMINUM ALLOY.

FACE SHALL BE PRESSURE SENSITIVE, SELF ADHERING, TYPE IV, TYPE V, OR TYPE IX RETROREFLECTIVE SHEETING.

DELINEATORS SHALL BE FASTENED WITH 5/16" STAINLESS STEEL ASTM A-193 CLASS 1, GRADE B8 (TYPE 304) OR BETTER HEX HEAD BOLT (LENGTH AS REQUIRED), WASHER AND FIBER INSERT SELF LOCKING NUT, ON STANDARD METAL DELINEATOR POST.

INSTALLATION ON PERMANENT CONCRETE BARRIER, BRIDGE PARAPETS & RETAINING WALLS

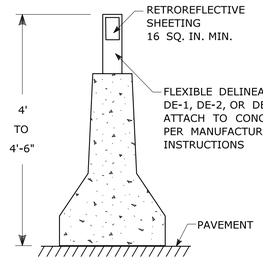

DELINEATORS DE-1, DE-2, DE-3 TO BE PAID FOR UNDER SECTION 12.05 DELINEATORS.

DELINEATORS DE-4, DE-4A, DE-5 FOR INSTALLATION ON METAL BRIDGE RAIL

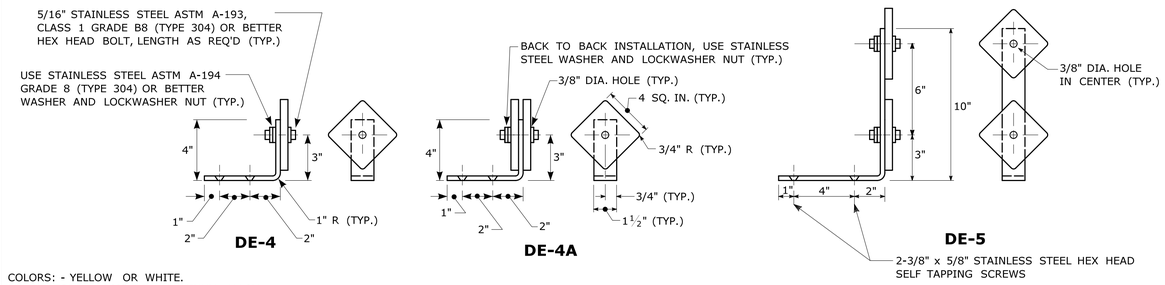

COLORS: - YELLOW OR WHITE.
DELINEATORS - .063" THK. ALUMINUM ALLOY.
BRACKET - .125" THK. ALUMINUM ALLOY, AND SHALL CONFORM TO SPECIFICATION M.18.07-03 BRIDGE RAIL MOUNTING BRACKETS.
FACE SHALL BE PRESSURE SENSITIVE, SELF ADHERING, TYPE IV, TYPE V, OR TYPE IX RETROREFLECTIVE SHEETING.
USE STAINLESS STEEL WASHERS ON FACE OF DELINEATORS, 5/8" O.D. X 3/8" I.D. X .032" THK. (TYP.)

DELINEATORS TYPE DE-4, DE-4A, AND DE-5 TO BE PAID FOR UNDER SECTION 12.05 DELINEATORS.

TYPICAL MAINLINE & INTERCHANGE DELINEATION

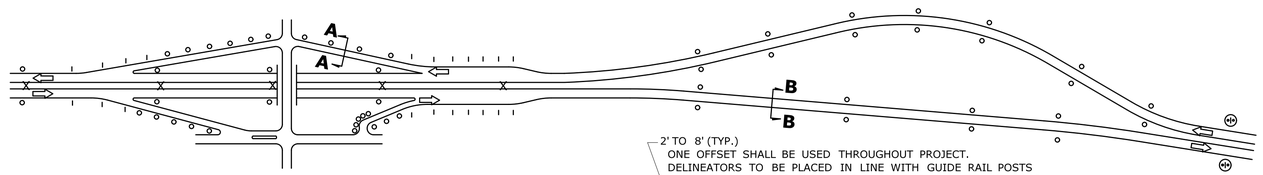

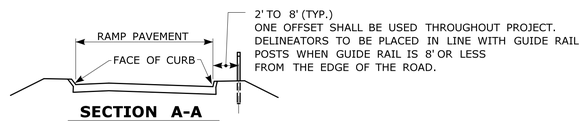

SECTION A-A

DELINEATOR PLACEMENT ON RAMPS
ON TANGENT SECTIONS - RIGHT SIDE OF RAMP
ON CURVED SECTIONS - BOTH SIDES OF CURVE

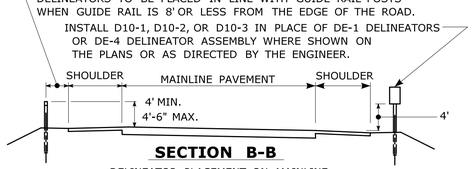

SECTION B-B

DELINEATOR PLACEMENT ON MAINLINE

DELINEATOR SPACING NOTES:

1) AT LOCATIONS WHERE THE MEDIAN WIDTH (BETWEEN SHOULDERS) IS 12' OR LESS, AND MEDIAN BEAM RAIL IS PRESENT, TYPE DE-3 DELINEATORS SHALL BE MOUNTED WITHIN THE MEDIAN BEAM RAIL.
2) SPACING ON MAINLINE EXPRESSWAY TANGENTS SHALL BE 400'.
3) SPACING ON MAINLINE EXPRESSWAY CURVES SHALL BE AS SPECIFIED IN TABLE 3F-1 OF THE MUTCD.
4) ON ACCELERATION AND DECELERATION LANES AND ON-RAMP TANGENT SECTIONS, DELINEATOR SPACING SHALL BE 100'.
5) ON CURVED PORTIONS OF RAMPS, DELINEATOR SPACING SHALL BE IN ACCORDANCE WITH TABLE 3F-1 OF THE MUTCD, BUT NOT TO EXCEED 100'.

LEGEND:

- o DE-1 DELINEATORS OR DE-4 DELINEATOR ASSEMBLY
- I DE-2 DELINEATORS OR DE-5 DELINEATOR ASSEMBLY
- X DE-3 DELINEATORS ASSEMBLY OR DE-4A DELINEATOR
- (1) D10-1, 2, 3, OR 4 ASSEMBLY TO BE INSTALLED WHERE SHOWN ON PLANS OR AS DIRECTED BY THE ENGINEER.

COLOR APPLICATION, FOR DE-1 THRU DE-5

LEFT SIDE OF ALL ROADWAYS AND RAMPS - YELLOW
RIGHT SIDE OF ALL ROADWAYS AND RAMPS - WHITE

MUTCD TABLE 3F-1 APPROXIMATE SPACING FOR DELINEATORS ON HORIZONTAL CURVES

RADIUS (R) OF CURVE (feet)	APPROXIMATE SPACING (S) ON CURVE (feet)
50	20
115	25
180	35
250	40
300	50
400	55
500	65
600	70
700	75
800	80
900	85
1,000	90

DISTANCE IN FEET WERE ROUNDED TO THE NEAREST 5 FEET. SPACING FOR SPECIFIC RADII MAY BE INTERPOLATED FROM TABLE. THE MINIMUM SPACING SHOULD BE 20 FEET.
THE SPACING ON CURVES SHOULD NOT EXCEED 300 FEET. IN ADVANCE OF OR BEYOND A CURVE, AND PROCEEDING AWAY FROM THE END OF THE CURVE, THE SPACING OF THE FIRST DELINEATOR IS 2S, THE SECOND IS 3S, AND THE THIRD 6S BUT NOT TO EXCEED 300 FEET.

S REFERS TO THE DELINEATOR SPACING FOR SPECIFIC RADII COMPUTED FROM THE FORMULA: $S=3\sqrt{R-50}$.

DELINEATORS DE-7, DE-7A, DE-7B, DE-7C FOR INSTALLATION ON TEMPORARY PRECAST CONCRETE BARRIER CURB AND TEMPORARY PRECAST CONCRETE BARRIER CURB (STRUCTURE)

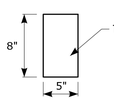

DE-7 ONE WAY WHITE
DE-7A ONE WAY YELLOW
DE-7B TWO WAY YELLOW
DE-7C WHITE/YELLOW BACK TO BACK
TEMPORARY PRECAST CONCRETE BARRIER DELINEATORS ARE TO BE FABRICATED OF ALUMINUM, STEEL, PLASTIC, OR OF A MATERIAL APPROVED BY THE ENGINEER AND MOUNTED IN THE CENTER OF EACH SECTION OF TEMPORARY BARRIER AS REQUIRED AND PER MANUFACTURER'S INSTRUCTIONS.

SPACING FOR TEMPORARY BARRIER CURB DELINEATORS:

ON THE LEADING TAPERED SECTION - EVERY 20',
ON THE FIRST 100' OF THE PARALLEL SECTION - EVERY 20',
ON THE REMAINING LENGTH - EVERY 100', MINIMUM OF 2 IF LESS THAN 100',
ALTERNATING ONE WAY TRAFFIC - EVERY 20',
ALL OTHER ROADWAYS SHALL BE DELINEATED IN ACCORDANCE WITH MUTCD.

DELINEATORS DE-7, DE-7A, DE-7B, DE-7C TO BE PAID FOR UNDER SECTION 12.05 DELINEATORS.

DELINEATORS D10-1, D10-2, D10-3, D10-4 INCIDENT MANAGEMENT AND MILE POST MARKER ASSEMBLY

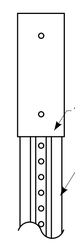

D10-1 SIGN # 51-5303 INCIDENT MANAGEMENT MARKER, ONE DIGIT WITH DECIMAL
D10-2 SIGN # 51-5304 INCIDENT MANAGEMENT MARKER, TWO DIGITS WITH DECIMAL
D10-3 SIGN # 51-5305 INCIDENT MANAGEMENT MARKER, THREE DIGITS WITH DECIMAL

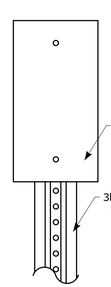

D10-4 SIGN # 51-5307 MILE MARKER, VARIABLE CARDINAL DIRECTION, VARIABLE SHIELD, VARIABLE NUMERALS

INCIDENT MANAGEMENT AND MILE POST MARKER ASSEMBLY TO BE PAID FOR UNDER SECTION 12.08 SIGN FACE SHEET ALUMINUM

ATTENUATOR REFLECTOR SIGN #50-5032

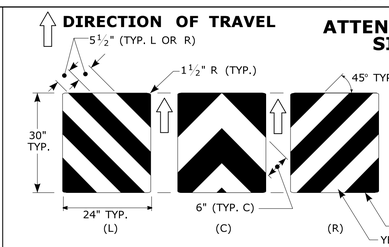

THIS SHEETING TO BE INSTALLED ON THE NOSE OF THE IMPACT ATTENUATOR WITH ADHESIVE IN ACCORDANCE WITH THE MANUFACTURER'S RECOMMENDATIONS.
THE SHEETING SHALL COVER THE NOSE OF THE IMPACT ATTENUATOR.
ON A CURVED NOSE, THE WIDTH OF THE SHEETING SHALL EXTEND 1" BEYOND THE POINT OF CURVATURE ON EACH SIDE OF THE NOSE.
THE HEIGHT AND WIDTH OF THE SHEETING VARIES DEPENDING ON THE SIZE OF THE NOSE OF THE IMPACT ATTENUATOR.

ATTENUATOR REFLECTOR TO BE PAID FOR UNDER SECTION 18.0 IMPACT ATTENUATOR

DELINEATOR DE-9 TYPE I OBJECT MARKER SIGN #51-5031

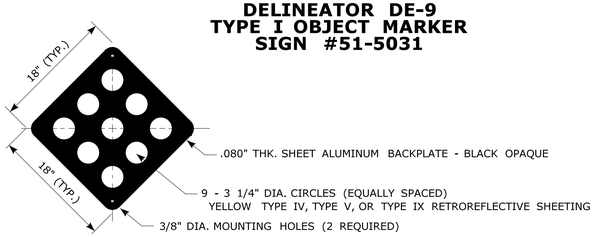

WHEN ERECTED AS A SEPARATE INSTALLATION A 3lb. METAL SIGN POST SHALL BE USED.
THE BOTTOM OF THE DE-9 SHALL BE 4' ABOVE THE ADJACENT PAVEMENT AND THE PENETRATION OF THE POST SHALL BE 38" MINIMUM BELOW THE FINISHED GRADE.

DELINEATORS DE-9 TO BE PAID FOR UNDER SECTION 12.05 DELINEATORS.

TYPE 3 OBJECT MARKERS SIGN #51-5023

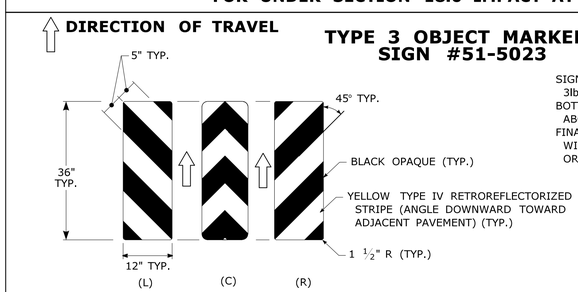

SIGN #51-5023 MARKER MOUNTED ON 3lb. METAL SIGN POST.
BOTTOM OF SIGN #51-5023 TO BE 4' ABOVE ADJACENT EDGE OF PAVEMENT.
FINAL LOCATIONS OF SIGN #51-5023 MARKERS WILL BE AS SHOWN ON THE PLAN OR AS DIRECTED BY THE ENGINEER.

TYPE 3 OBJECT MARKER TO BE PAID FOR UNDER SECTION 12.08 SIGN FACE SHEET ALUMINUM

REV.	DATE	REVISION DESCRIPTION
3	8-2015	UPDATED PER MUTCD AND FORM 816 JAN 2015 REVISION.
2	2-2011	MINOR REVISIONS.
1	1-2010	INCLUDED DETAILS IN D10-1, D10-2, D10-3 DELINEATORS.

THE INFORMATION, INCLUDING ESTIMATED QUANTITIES OF WORK, SHOWN ON THESE SHEETS IS BASED ON LIMITED INVESTIGATIONS BY THE STATE AND IS IN NO WAY WARRANTED TO INDICATE THE CONDITIONS OF ACTUAL QUANTITIES OF WORK WHICH WILL BE REQUIRED.

Plotted Date: 8/27/2015

NOT TO SCALE

STATE OF CONNECTICUT
DEPARTMENT OF TRANSPORTATION

Filename: CTDOT_TRAFFIC_STD.DGN Model: TR-1205_01

SUBMITTED BY: NAME/DATE/TIME:
APPROVED BY: NAME/DATE/TIME:

CTDOT STANDARD SHEET

OFFICE OF ENGINEERING

STANDARD SHEET TITLE:
DELINEATION, DELINEATORS AND OBJECT MARKER DETAILS

STANDARD SHEET NO.:
TR-1205_01

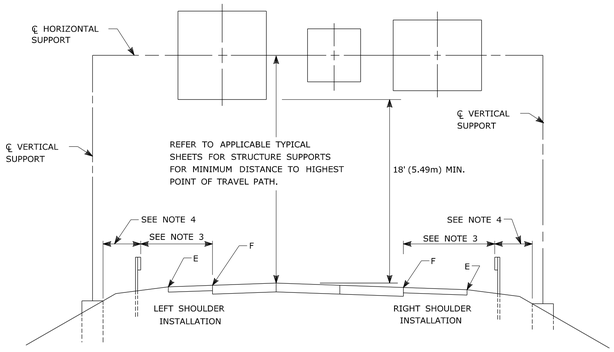

GUIDE RAIL PLACEMENT FOR SIGN SUPPORTS

NOTES:

1) FOR PLACEMENT OF CANTILEVER SIGN SUPPORT USE APPLICABLE PORTION OF ABOVE DETAIL.
2) BARRIER SYSTEM IS REQUIRED FOR BOTH SIDES OF MEDIAN SUPPORTS IN NARROW MEDIANS.
3) AT LOCATIONS WHERE IMPACT PROTECTION IS NOT REQUIRED FOR ROADSIDE ELEMENTS, FACE OF GUIDE RAIL SHALL BE PLACED 30' (9.1m) FROM EDGE OF TRAVELWAY.
4) OFFSETS OF FOUNDATIONS FROM BARRIER SYSTEMS SHALL BE AS SHOWN ELSEWHERE ON THE CONTRACT PLANS.
5) ALL SIGNS ARE TO BE HORIZONTAL, REGARDLESS OF CAMBER IN SUPPORT.

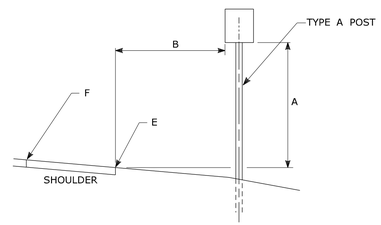

TYPICAL REGULATORY & WARNING SIGN PLACEMENT

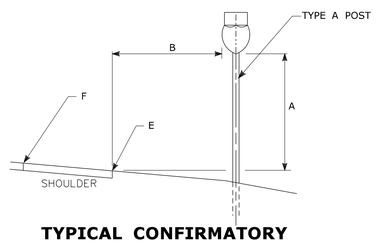

TYPICAL CONFIRMATORY ROUTE MARKER PLACEMENT

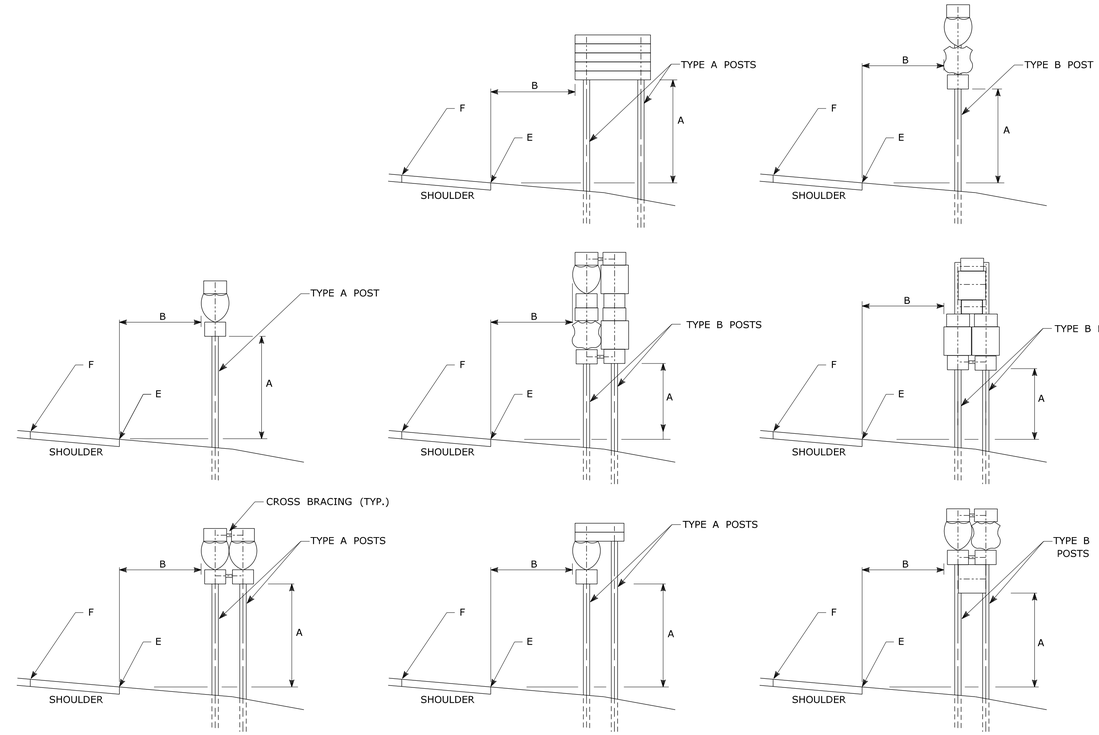

TYPICAL SIGN PLACEMENT AND POST SELECTION

NOTES:

ALL SIGNS AND SHIELDS ON DIRECTIONAL ASSEMBLIES SHALL ABUT VERTICALLY

2 POST ASSEMBLIES SHALL BE PROVIDED WITH 3" X ¼" (75 X 6) GALVANIZED STEEL BAR CROSS BRACING.

REFER TO TRAFFIC TYPICAL SHEET "TYPICAL METAL SIGN POSTS AND SIGN MOUNTING DETAILS" FOR SIGN POSTS.

DIM."A"	DIM."B" △1	ASSEMBLY LOCATION
7' (2.1m)	6' (1.8m) 12' (3.6m) △2	RURAL DISTRICTS & EXPRESSWAYS
7' (2.1m)	2' (0.6m)	BUSINESS & RESIDENTIAL DISTRICTS WHERE PARKING OR OTHER OBSTRUCTIONS LIMIT VISIBILITY
8'-6" (2.6m)	1' (0.3m)	SIDEWALKS △3

△1 OR AS DIRECTED BY THE ENGINEER

△2 6' FROM EDGE OF SHOULDER, WHEN SHOULDER IS OVER 6' WIDE
12' FROM EDGE OF TRAVELWAY, WHEN SHOULDER IS LESS THAN 6' WIDE.

△3 A CLEAR PATH OF NOT LESS THAN 3 FT (0.9m) SHALL BE PROVIDED IN SIDEWALK AREAS.

"E" DENOTES EDGE OF SHOULDER OR FACE OF CURB

"F" DENOTES EDGE OF TRAVELWAY

FOR MAXIMUM EFFECTIVENESS AND TO ELIMINATE OR MINIMIZE GLARE, POSITION SIDE MOUNTED SIGNS ON STRUCTURAL STEEL BREAKAWAY SIGN SUPPORTS AS FOLLOWS:

ON A TANGENT SECTION, POSITION THE SIGN SO THE VERTICAL AXIS IS PLUMB AND THE HORIZONTAL AXIS IS AT AN ANGLE OF 93° WITH THE TRAFFIC LANE WHICH THE SIGN SERVES:

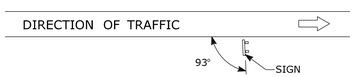

DIAGRAM "A"

ON A HORIZONTAL CURVE SECTION, POSITION THE SIGN SO THE VERTICAL AXIS IS PLUMB AND THE HORIZONTAL AXIS IS AT AN ANGLE OF 90° WITH A STRAIGHT LINE BETWEEN THE SIGN AND THE POINT AT WHICH THE SIGN SHALL BE READ.

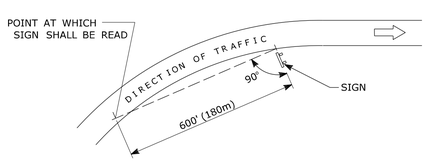

DIAGRAM "B"

SIGN ORIENTATION DETAILS

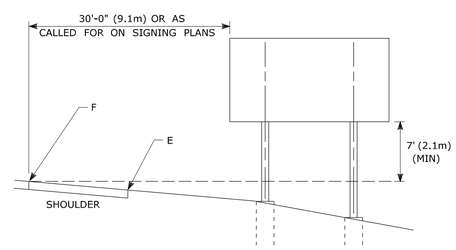

TYPICAL PLACEMENT OF SIDE MOUNTED SIGNS ON STRUCTURAL STEEL BREAKAWAY SIGN SUPPORTS

NOTES:

1) MIN. VERTICAL CLEARANCE ABOVE SIDEWALKS SHALL BE 8'-6" (2.6m).
2) WHERE GUIDE RAIL IS USED, THE OFFSET TO THE NEAR EDGE OF SIGN FACE SHALL BE AS SHOWN ELSEWHERE IN THE CONTRACT PLANS.
3) ON INTERSECTING ROADS AT RAMP TERMINI, THE OFFSET TO THE NEAR EDGE OF OF SIGN FACE SHALL BE 6' (1.8m) MIN. FROM POINT "E".
4) IF 30'-0" (9.1m) MIN. CANNOT BE MET, PLEASE CONTACT THE ENGINEER.

REV.	DATE	REVISION DESCRIPTION
1	2-2011	MINOR REVISIONS.

THE INFORMATION, INCLUDING ESTIMATED QUANTITIES OF WORK, SHOWN ON THESE SHEETS IS BASED ON LIMITED INVESTIGATIONS BY THE STATE AND IS IN NO WAY WARRANTED TO INDICATE THE CONDITIONS OF ACTUAL QUANTITIES OF WORK WHICH WILL BE REQUIRED.

Plotted Date: 2/16/2011

DIMENSIONS ARE IN ENGLISH (".") & METRIC UNITS (mm).
METRIC DIMENSIONS ARE ROUNDED:
- OVER 1" TO NEAREST 5 mm
- UNDER 1" TO NEAREST 1 mm.

NOT TO SCALE

STATE OF CONNECTICUT
DEPARTMENT OF TRANSPORTATION

Filename: CTDOT_TRAFFIC_STD.dgn Model: TR-1208_01

SUBMITTED BY: NAME/DATE/TIME:

APPROVED BY: NAME/DATE/TIME:

CTDOT STANDARD SHEET

OFFICE OF ENGINEERING

STANDARD SHEET TITLE:

SIGN SUPPORT & SIGN PLACEMENT DETAILS, GORE EXIT SIGN

STANDARD SHEET NO.:

TR-1208_01

TYPICAL METAL SIGN POSTS

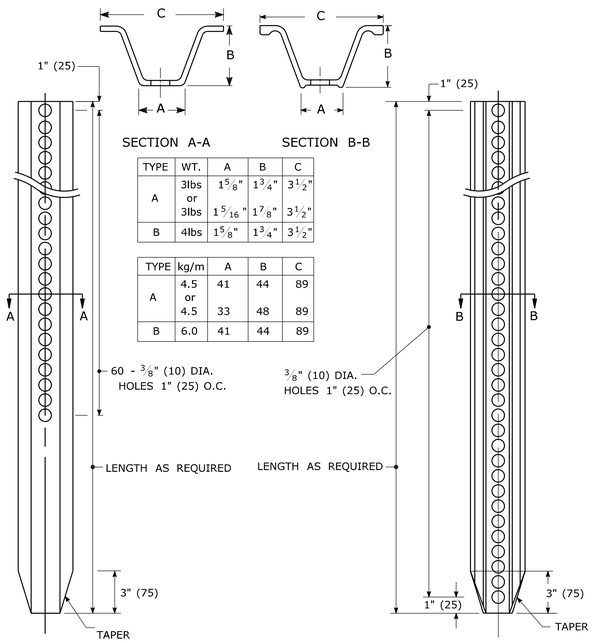

TYPE	WT.	A	B	C
A	3lbs or 3lbs	1 5/8"	1 3/4"	3 1/2"
		1 5/16"	1 7/8"	3 1/2"
B	4lbs	1 5/8"	1 3/4"	3 1/2"

TYPE	kg/m	A	B	C
A	4.5 or 4.5	41	44	89
		33	48	89
B	6.0	41	44	89

TYPICAL SIGN PANEL ATTACHMENT

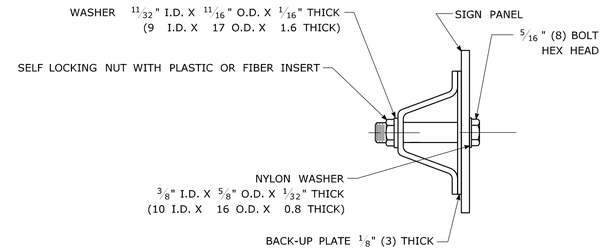

TYPICAL BACK TO BACK SIGN PANEL ATTACHMENT

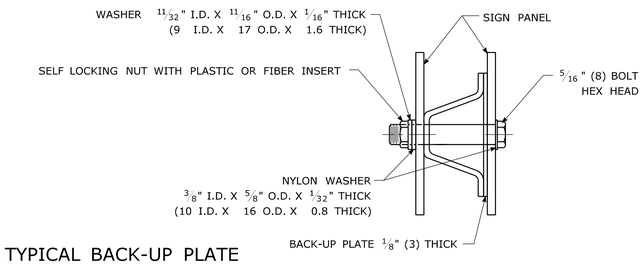

TYPICAL BACK-UP PLATE

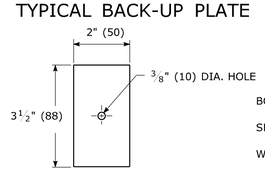

BOLTS - STAINLESS STEEL CONFORMING TO ASTM F593, ALLOY GROUP 1 OR 2 (ALLOY TYPES 304 OR 316).
SELF LOCKING NUTS - STAINLESS STEEL CONFORMING TO ASTM F594, ALLOY GROUP 1 OR 2 (ALLOY TYPES 304 OR 316).
WASHERS - STAINLESS STEEL CONFORMING TO ASTM A240, (ALLOY TYPES 304 OR 316).

METAL DELINEATOR POST

WT./FT. = 1.12 LBS. MIN.
(MASS/m = 1.67 kg/m MIN.)

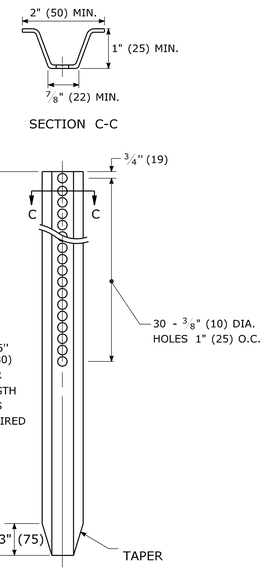

GENERAL NOTES:

1. STEEL FOR DELINEATOR POSTS SHALL BE ASTM A36/A36(m) STEEL. STEEL FOR ALL OTHER POSTS SHALL CONFORM TO THE MECHANICAL REQUIREMENTS OF ASTM A 499 GRADE 60 AND TO THE CHEMICAL REQUIREMENTS OF ASTM A1 CARBON STEEL TEE RAIL HAVING NOMINAL WEIGHT (MASS) OF 91lbs. (45 kg.) OR GREATER PER LINEAR YARD (METER).
2. AFTER FABRICATION, ALL STEEL POSTS, STRAPS AND PLATES SHALL BE GALVANIZED TO MEET THE REQUIREMENTS OF ASTM A123/A123(m).
3. WASHERS FOR BREAKAWAY INSTALLATIONS SHALL MEET ASTM F436, TYPE 1.
4. ALL BOLTS, NUTS, AND WASHERS FOR BREAKAWAY INSTALLATIONS SHALL BE GALVANIZED TO MEET THE REQUIREMENTS OF ASTM A153/A153(m).
5. ALL SIGN POSTS SHALL HAVE BREAKAWAY FEATURES THAT MEET AASHTO REQUIREMENTS CONTAINED IN THE CURRENT "STANDARD SPECIFICATIONS FOR STRUCTURAL SUPPORTS FOR HIGHWAY SIGNS, LUMINAIRES AND TRAFFIC SIGNALS." THE BREAKAWAY FEATURES SHALL BE STRUCTURALLY ADEQUATE TO CARRY THE SIGNS SHOWN IN THE PLANS AT 60 mph (97 km/h) WIND LOADINGS. INSTALLATIONS SHALL BE IN ACCORDANCE WITH MANUFACTURERS RECOMMENDATIONS.
6. TYPE A POSTS - 3 lbs/ft (4.5 kg/m) TYPE B POSTS - 4 lbs/ft (6 kg/m).

BREAKAWAY TYPE I INSTALLATION

FOR 3 & 4 LB. POSTS
(FOR 4.5 & 6.0 kg/m POSTS)

BOLTS - HEX HEAD, INTEGRAL FLANGE CONFORMING TO ASTM A354, SIZE IS 5/16" (8) - 18 UNC X 1 3/4" (44) GRADE BC FOR 3 LBS/FT (4.5kg/m) POSTS & 5/16" (8) - 18 UNC X 2" (50) GRADE BD FOR 4 LBS./FT (6.0 kg/m) POSTS.
NUTS - 5/16" (8) - 18 UNC HEX HEAD, INTEGRAL FLANGE CONFORMING TO ASTM A563, GRADE DH.
LOCKWASHERS - 3/8" (10) HEAVY DUTY EXTERNAL TYPE.

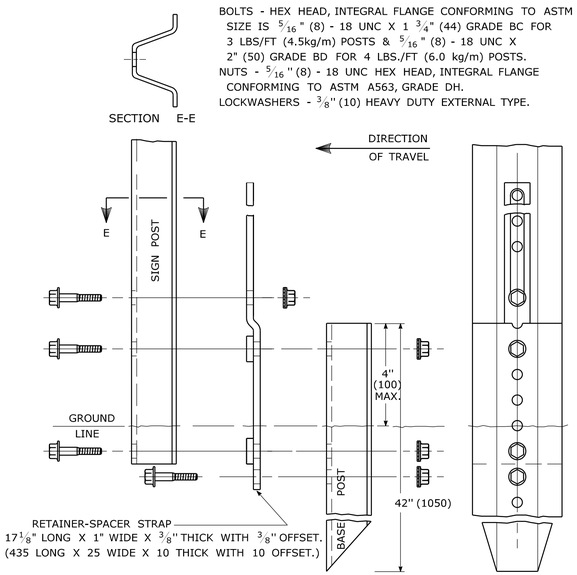

BREAKAWAY TYPE II INSTALLATION

FOR 3 & 4 LB. POSTS
(FOR 4.5 & 6.0 kg/m POSTS)

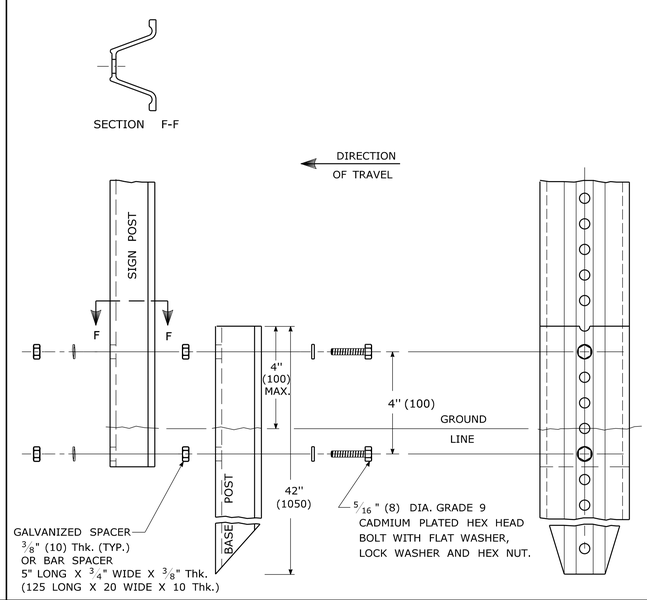

TYPICAL SLEEVE FOR PAVED AREAS

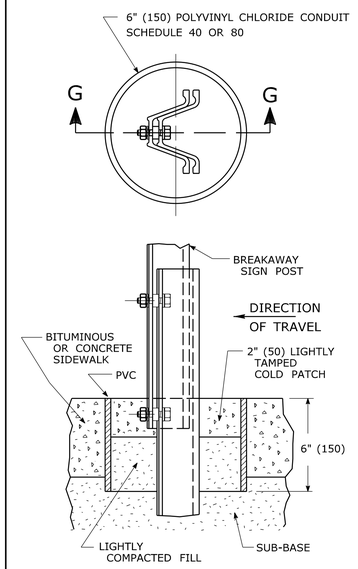

45° SUBMOUNTING BRACKET

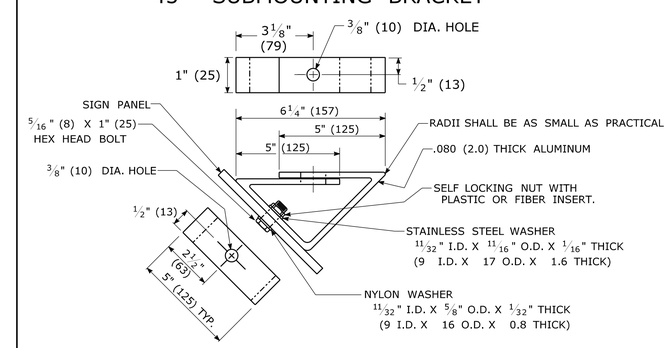

REV.	DATE	REVISION DESCRIPTION
1	2-2011	MINOR REVISIONS.

THE INFORMATION, INCLUDING ESTIMATED QUANTITIES OF WORK, SHOWN ON THESE SHEETS IS BASED ON LIMITED INVESTIGATIONS BY THE STATE AND IS IN NO WAY WARRANTED TO INDICATE THE CONDITIONS OF ACTUAL QUANTITIES OF WORK WHICH WILL BE REQUIRED.

Plotted Date: 3/22/2011

DIMENSIONS ARE IN ENGLISH (.") & METRIC UNITS (mm).
METRIC DIMENSIONS ARE ROUNDED:
- OVER 1" TO NEAREST 5 mm
- UNDER 1" TO NEAREST 1 mm.

NOT TO SCALE

STATE OF CONNECTICUT
DEPARTMENT OF TRANSPORTATION

Filename: CTDOT_TRAFFIC_STD.dgn Model: TR-1208_02

SUBMITTED BY: NAME/DATE/TIME:
APPROVED BY: NAME/DATE/TIME:

CTDOT
STANDARD SHEET

OFFICE OF ENGINEERING

STANDARD SHEET TITLE:

METAL SIGN POSTS AND SIGN MOUNTING DETAILS

STANDARD SHEET NO.:

TR-1208_02

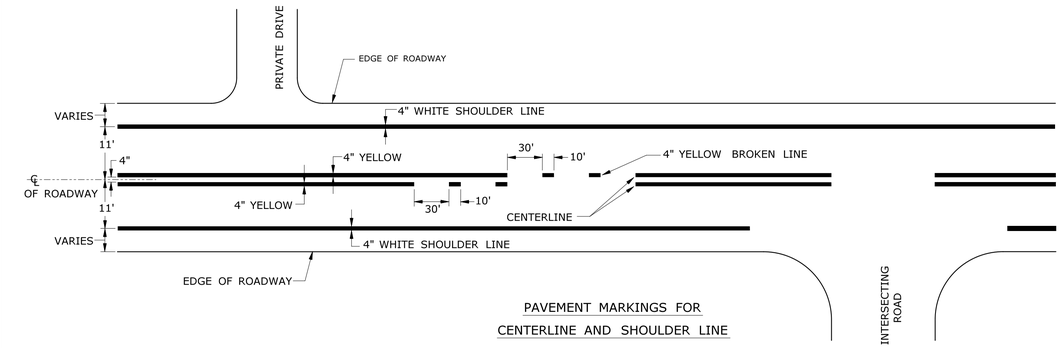

PAVEMENT MARKINGS FOR
CENTERLINE AND SHOULDER LINE

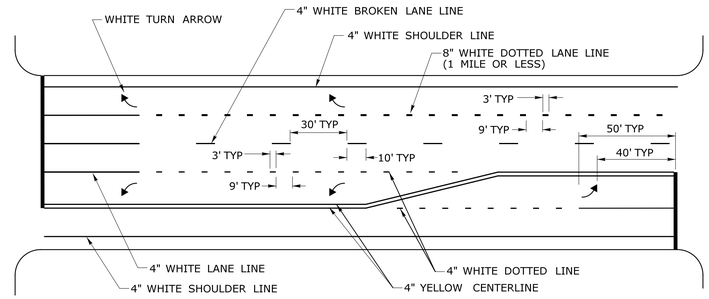

PAVEMENT MARKINGS FOR
TURNING LANES

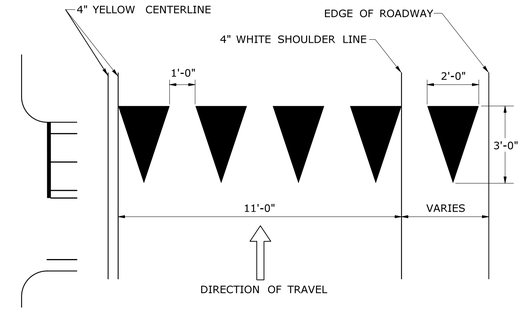

YIELD LINE DETAIL
(WHITE)

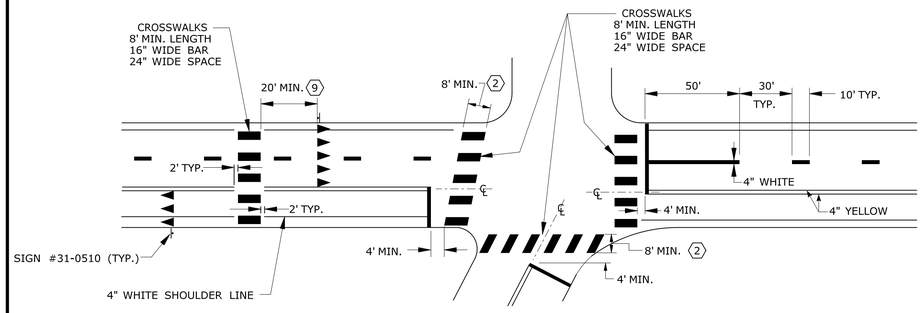

PAVEMENT MARKINGS FOR
STOP BARS, YIELD LINES, AND CROSSWALKS

NOTES:

STOP BARS AND YIELD LINES

1. STOP BARS AND YIELD LINES SHALL BE WHITE.
2. STOP BARS SHALL BE 12" MIN. UNLESS OTHERWISE NOTED ON PLANS.
3. STOP BARS TO BE MARKED A MINIMUM OF 4' IN ADVANCE OF THE NEAREST EDGE OF CROSSWALK AND SHOULD BE PLACED 90° TO THE CENTERLINE OF THE ROADWAY.
4. IN THE ABSENCE OF A MARKED CROSSWALK THE STOP BAR SHOULD BE PLACED 90° TO THE CENTERLINE OF THE ROADWAY, AT THE DESIRED STOPPING POINT AT LEAST 5' AND NO MORE THAN 30' FROM THE NEAREST EDGE OF THE INTERSECTING ROADWAY.
5. THE STOP BAR SHOULD BE PLACED IN LINE WITH THE STOP SIGN. HOWEVER, IF THE STOP SIGN CANNOT BE LOCATED EXACTLY WHERE VEHICLES ARE EXPECTED TO STOP, THE STOP BAR SHOULD BE PLACED AT THE STOPPING POINT.
6. FOR STOP BARS AT RAMPS SEE DETAILS "O" & "P" AND NOTES ON TRAFFIC STANDARD SHEET TR-1210_02 "PAVEMENT MARKINGS FOR DIVIDED HIGHWAYS".
7. YIELD LINES SHOULD BE INSTALLED FROM THE CENTERLINE TO THE CURB LINE/EDGE OF ROAD AND SHOULD BE PLACED 90° TO THE CENTERLINE OF THE ROADWAY.
8. FOR YIELD LINE INSTALLATIONS, ONLY FULL TRIANGLES ARE TO BE INSTALLED.

9. AT MID-BLOCK CROSSWALKS ONLY, YIELD LINES SHOULD BE INSTALLED 20 TO 50 FEET IN ADVANCE OF THE NEAREST CROSSWALK LINE, OR AS DIRECTED BY THE ENGINEER.

10. THE YIELD LINE SHOULD BE PLACED IN LINE WITH A YIELD SIGN. HOWEVER, IF THE YIELD SIGN CANNOT BE LOCATED EXACTLY WHERE VEHICLES ARE EXPECTED TO YIELD, THE YIELD LINE SHOULD BE PLACED AT THE YIELDING POINT.

CROSSWALKS

1. CROSSWALK MARKINGS SHALL BE WHITE.

2. AT LOCATIONS WHERE THE CROSSWALK IS SKEWED, BARS TO BE PARALLEL TO ℄ AND ENDS OF BARS TO BE PARALLEL. THE LENGTH OF THE BARS WILL VARY DEPENDING ON THE ANGLE OF SKEW.

3. BARS SHOULD BE NO CLOSER THAN 1' FROM CURB LINE/EDGE OF ROAD.
4. ONLY FULL LENGTH BARS ARE TO BE INSTALLED.
5. DECORATIVE CROSSWALKS SHALL BE BANDED FROM CURB TO CURB WITH A MINIMUM 12" WIDE WHITE TRANSVERSE LINE ALONG EACH EDGE.
6. 24" WIDE SPACE TO BE CENTERED ON YELLOW CENTERLINE.

RAILROAD GRADE CROSSINGS

1. RAILROAD MARKINGS SHALL BE WHITE.
2. ON MULTI-LANE ROADS THE TRANSVERSE BANDS SHOULD EXTEND ACROSS THE APPROACH LANES AND INDIVIDUAL R X R SYMBOLS SHOULD BE USED IN EACH APPROACH LANE.

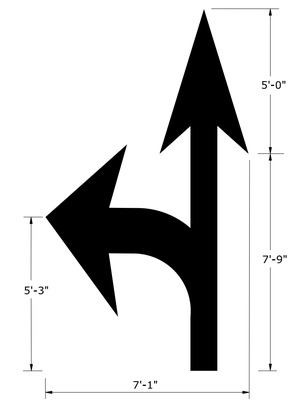

REFER TO ADJACENT VIEWS FOR DIMENSIONING
27.0 S.F.

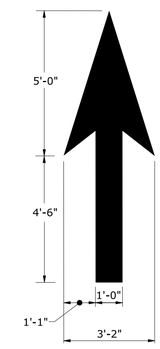

12.5 S.F.

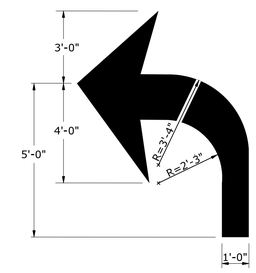

15.5 S.F.

27.0 S.F.
LEFT & RIGHT
ARROW COMBO

38.5 S.F.
3 WAY ARROW
COMBO

PAVEMENT ARROW DETAILS
(WHITE)
ARROWS SHALL BE CENTERED IN TRAVEL LANE

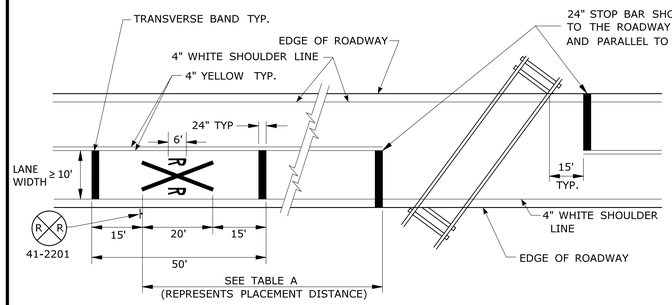

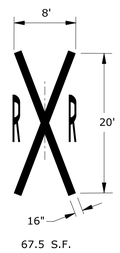

67.5 S.F.

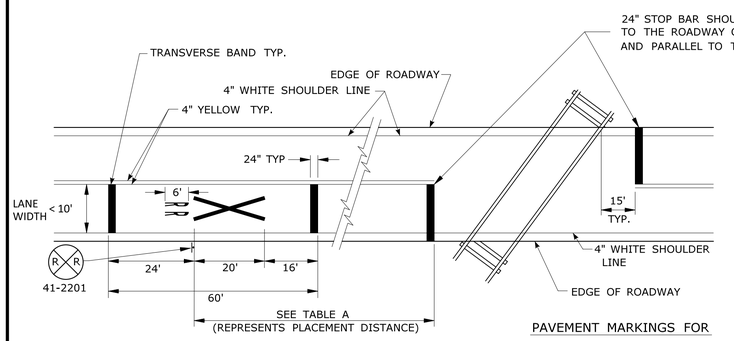

PAVEMENT MARKINGS FOR
RAILROAD GRADE CROSSINGS

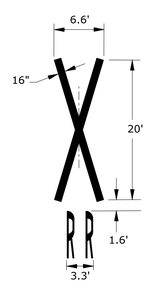

67.5 S.F.

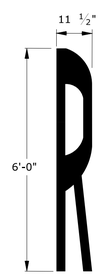

5.75 S.F.

TABLE A	
POSTED OR 85 PERCENTILE SPEED M.P.H.	MINIMUM DISTANCE FT.
20	100
25	100
30	100
35	100
40	125
45	175
50	250
55	325
60	400
65	475

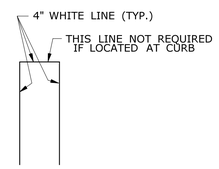

STANDARD
PARKING STALL

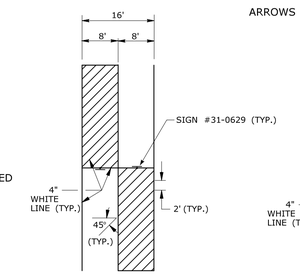

(PIGGY BACK STYLE)

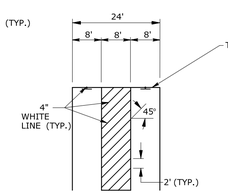

(SIDE BY SIDE STYLE)
(SHARED AISLE)

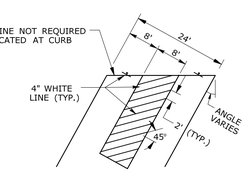

(ANGLED SIDE BY SIDE STYLE)
(SHARED AISLE)

PARKING STALLS FOR HANDICAPPED

NOTES:
PAVEMENT MARKING

1. FOR PAVEMENT MARKINGS ON A CLIMBING LANE SEE DETAIL "L" ON TRAFFIC STANDARD SHEET TR-1210_02 "PAVEMENT MARKINGS FOR DIVIDED HIGHWAYS".
2. AREA OF PAVEMENT MARKINGS AS INDICATED IS APPROXIMATE.
3. FOR PAVEMENT MARKING LINES, STOP BARS AND ARROWS AT RAMPS SEE DETAILS "O" & "P" AND NOTES ON TRAFFIC STANDARD SHEET TR-1210_02 "PAVEMENT MARKINGS FOR DIVIDED HIGHWAYS".
4. RIGHT TURN PAVEMENT MARKINGS ARROWS ARE MIRROR IMAGE OF LEFT TURN PAVEMENT MARKING ARROWS.
5. SHARED AISLES MAY NOT BE USED WHERE CONNECTICUT BUILDING CODE GOVERNS.
6. LANE WIDTHS TO BE 11' UNLESS OTHERWISE NOTED.

REV.	DATE	REVISION DESCRIPTION
3	10-2014	ADDED YIELD LINE DETAIL AND NOTES. REVISED NOTES FOR STOP BARS AND CROSSWALKS. REVISED MARKINGS FOR STOP BARS AND CROSSWALKS. REVISED STANDARD LANE WIDTH. REVISED MARKINGS FOR GRADE CROSSINGS AND TABLE A.
2	12-2013	REMOVED PAVEMENT MARKING ARROWS ON RAMPS NOTES AND ADDED NEW NOTE #3 REFERRING TO SHEET TR-1210_02.
1	2-2011	ADDED PAVEMENT MARKINGS FOR TURNING LANES.

THE INFORMATION, INCLUDING ESTIMATED QUANTITIES OF WORK, SHOWN ON THESE SHEETS IS BASED ON LIMITED INVESTIGATIONS BY THE STATE AND IS IN NO WAY WARRANTED TO INDICATE THE CONDITIONS OF ACTUAL QUANTITIES OF WORK WHICH WILL BE REQUIRED.

Plotted Date: 10/9/2014

DIMENSIONS ARE IN ENGLISH ('.")

NOT TO SCALE

STATE OF CONNECTICUT
DEPARTMENT OF TRANSPORTATION

Filename: CTDOT_TRAFFIC_STD.DGN Model: TR-1210_03

SUBMITTED BY: NAME/DATE/TIME:

APPROVED BY: NAME/DATE/TIME:

CTDOT
STANDARD SHEET

OFFICE OF ENGINEERING

STANDARD SHEET TITLE:

SPECIAL DETAILS AND PAVEMENT MARKINGS FOR TWO-WAY HIGHWAYS

STANDARD SHEET NO.:

TR-1210_03

E5 - SERIES

E5-1

EXIT

COPY & BORDER - WHITE
BACKGROUND - GREEN

AREA (SQ. FT)	SIZE (INCHES)	CONN. D.O.T. #	POSTS
16.0	48	51-6147	2

16 - SERIES

CONSTRUCTION AHEAD
ROAD USE RESTRICTED
STATE LIABILITY LIMITED
GENERAL STATUTES SEC 13a-115, 13a-145
COMMISSIONER OF TRANSPORTATION

	AREA (SQ. FT)	SIZE (INCHES)	CONN. D.O.T. #	POSTS
16-M	5.0	30X24	80-1613	1
16-H	17.5	60X42	80-1608	2
16-E	35.0	84X60	80-1605	2B

CONSTRUCTION AHEAD
SIDEWALK USE RESTRICTED
STATE LIABILITY LIMITED
GENERAL STATUTES SEC 13a-115, 13a-145
COMMISSIONER OF TRANSPORTATION

	AREA (SQ. FT)	SIZE (INCHES)	CONN. D.O.T. #	POSTS
16-S	10.0	48X30	80-1619	2

G20 - SERIES

G20-2a

END ROAD WORK

AREA (SQ. FT)	SIZE (INCHES)	CONN. D.O.T. #	POSTS
8.0	48X24	80-9612	2

ROAD WORK NEXT 0 MILE(S) BE PREPARED TO STOP

VARIABLE MILEAGE

AREA (SQ. FT)	SIZE (INCHES)	CONN. D.O.T. #	POSTS
90.0	120X108	80-9728	

WORK AREA BE PREPARED TO STOP

AREA (SQ. FT)	SIZE (INCHES)	CONN. D.O.T. #	POSTS
9.0	36	80-9711	1
16.0	48	80-9712	2

NEXT 0 MILES

VARIABLE MILEAGE

AREA (SQ. FT)	SIZE (INCHES)	CONN. D.O.T. #	POSTS
7.0	72X14	80-9720	

BUSINESS ACCESS

VARIABLE ARROW
COPY & BORDER - WHITE
BACKGROUND - BLUE

AREA (SQ. FT)	SIZE (INCHES)	CONN. D.O.T. #	POSTS
9.0	36	50-5934	2

M4 - SERIES

M4-8

DETOUR

AREA (SQ. FT)	SIZE (INCHES)	CONN. D.O.T. #	POSTS
2.0	24X12	80-9707	1

M4-9b

DETOUR

VARIABLE ARROW

AREA (SQ. FT)	SIZE (INCHES)	CONN. D.O.T. #	POSTS
5.0	30X24	80-9703	1

M4-8a

END DETOUR

AREA (SQ. FT)	SIZE (INCHES)	CONN. D.O.T. #	POSTS
3.0	24X18	80-9708	1

M4-9b

DETOUR

VARIABLE ARROW

AREA (SQ. FT)	SIZE (INCHES)	CONN. D.O.T. #	POSTS
6.25	30X30	80-9706	1

M4-10

(R) DETOUR
(L) DETOUR

AREA (SQ. FT)	SIZE (INCHES)	CONN. D.O.T. #	POSTS
6.0	48X18	80-9701R	2
6.0	48X18	80-9702L	2

DETOUR

VARIABLE ARROW

AREA (SQ. FT)	SIZE (INCHES)	CONN. D.O.T. #	POSTS
5.0	30X24	80-9710	1

R1 - SERIES

R1-1

STOP

*
COPY & BORDER - WHITE
BACKGROUND - RED

AREA (SQ. FT)	SIZE (INCHES)	CONN. D.O.T. #	POSTS
5.19	30	31-0552	1
13.30	48	31-0557	2

R1-2

YIELD

*
COPY & BORDER - RED
BACKGROUND - WHITE

AREA (SQ. FT)	SIZE (INCHES)	CONN. D.O.T. #	POSTS
3.90	36	31-0523	1
10.83	60	31-0528	2B

R4 - SERIES

R4-7

COPY & BORDER - BLACK
BACKGROUND - WHITE

AREA (SQ. FT)	SIZE (INCHES)	CONN. D.O.T. #	POSTS
5.0	24X30	31-1526	1

R9 & R11 - SERIES

R9-9

SIDEWALK CLOSED

COPY & BORDER - BLACK
BACKGROUND - WHITE

AREA (SQ. FT)	SIZE (INCHES)	CONN. D.O.T. #	POSTS
3.75	30X18	80-9076	1

R11-3a

ROAD CLOSED
00 MILES AHEAD
LOCAL TRAFFIC ONLY

VARIABLE MILEAGE
COPY & BORDER - BLACK
BACKGROUND - WHITE

AREA (SQ. FT)	SIZE (INCHES)	CONN. D.O.T. #	POSTS
12.5	60X30	80-9077	2

R9-11

SIDEWALK CLOSED AHEAD
CROSS HERE

VARIABLE ARROW
COPY & BORDER - BLACK
BACKGROUND - WHITE

AREA (SQ. FT)	SIZE (INCHES)	CONN. D.O.T. #	POSTS
3.0	24X18	80-9074	1

R11-3b

BRIDGE CLOSED
00 MILES AHEAD
LOCAL TRAFFIC ONLY

VARIABLE MILEAGE
COPY & BORDER - BLACK
BACKGROUND - WHITE

AREA (SQ. FT)	SIZE (INCHES)	CONN. D.O.T. #	POSTS
12.5	60X30	80-9078	2

R9-11a

SIDEWALK CLOSED
CROSS HERE

VARIABLE ARROW
COPY & BORDER - BLACK
BACKGROUND - WHITE

AREA (SQ. FT)	SIZE (INCHES)	CONN. D.O.T. #	POSTS
2.0	24X12	80-9075	1

R11-3b

ROAD CLOSED TO THRU TRAFFIC

COPY & BORDER - BLACK
BACKGROUND - WHITE

AREA (SQ. FT)	SIZE (INCHES)	CONN. D.O.T. #	POSTS
12.5	60X30	80-9081	2

R11-2

ROAD CLOSED

COPY & BORDER - BLACK
BACKGROUND - WHITE

AREA (SQ. FT)	SIZE (INCHES)	CONN. D.O.T. #	POSTS
10.0	48X30	80-9080	2

ROAD WORK AHEAD
FINES DOUBLED

COPY & BORDER - BLACK
BACKGROUND - WHITE

AREA (SQ. FT)	SIZE (INCHES)	CONN. D.O.T. #	POSTS
14.0	48X42	31-1906	2
22.5	60X54	31-1907	2
30.0	72X60	31-1908	2B

W1 - SERIES

W1-4

(L) (R)

AREA (SQ. FT)	SIZE (INCHES)	CONN. D.O.T. #	POSTS
9.0	36	80-9432L	1
9.0	36	80-9431R	1
16.0	48	80-9452L	2
16.0	48	80-9451R	2

W1-6

(L or R)

AREA (SQ. FT)	SIZE (INCHES)	CONN. D.O.T. #	POSTS
8.0	48X24	80-9424	2
12.5	60X30	80-9423	2

W1-8

AREA (SQ. FT)	SIZE (INCHES)	CONN. D.O.T. #	POSTS
3.0	18X24	80-9401	1
5.0	24X30	80-9403	1
7.5	30X36	80-9404	1

BOTH LANES SHIFT LEFT AHEAD (L)
BOTH LANES SHIFT RIGHT AHEAD (R)

AREA (SQ. FT)	SIZE (INCHES)	CONN. D.O.T. #	POSTS
16.0	48	80-9433L	2
16.0	48	80-9435R	2

AHEAD (L) AHEAD (R)

AREA (SQ. FT)	SIZE (INCHES)	CONN. D.O.T. #	POSTS
25.0	60	80-9483L	2B
25.0	60	80-9485R	2B

BOTH LANES SHIFT LEFT (L)
BOTH LANES SHIFT RIGHT (R)

AREA (SQ. FT)	SIZE (INCHES)	CONN. D.O.T. #	POSTS
16.0	48	80-9434L	2
16.0	48	80-9436R	2

(L) (R)

AREA (SQ. FT)	SIZE (INCHES)	CONN. D.O.T. #	POSTS
25.0	60	80-9484L	2B
25.0	60	80-9486R	2B

AHEAD (L) AHEAD (R)

AREA (SQ. FT)	SIZE (INCHES)	CONN. D.O.T. #	POSTS
25.0	60	80-9443L	2B
25.0	60	80-9445R	2B

(L) (R)

AREA (SQ. FT)	SIZE (INCHES)	CONN. D.O.T. #	POSTS
25.0	60	80-9444L	2B
25.0	60	80-9446R	2B

W3 - SERIES

W3-1

STOP AHEAD

AREA (SQ. FT)	SIZE (INCHES)	CONN. D.O.T. #	POSTS
9.0	36	80-9808	1

W3-1a

OCTAGON - RED W/ WHITE BORDER
ARROW & BORDER - BLACK
BACKGROUND - FLUORESCENT ORANGE

AREA (SQ. FT)	SIZE (INCHES)	CONN. D.O.T. #	POSTS
9.0	36	80-9050	1
16.0	48	80-9051	2

W3-2a

TRIANGLE - RED W/ WHITE BORDER
ARROW & BORDER - BLACK
BACKGROUND - FLUORESCENT ORANGE

AREA (SQ. FT)	SIZE (INCHES)	CONN. D.O.T. #	POSTS
9.0	36	80-9054	1
16.0	48	80-9055	2

W3-3

TOP CIRCLE - RED
MIDDLE CIRCLE - YELLOW
BOTTOM CIRCLE - GREEN
COPY & BORDER - BLACK
BACKGROUND - FLUORESCENT ORANGE

AREA (SQ. FT)	SIZE (INCHES)	CONN. D.O.T. #	POSTS
9.0	36	80-9052	1
16.0	48	80-9053	2

W4-W6 - SERIES

W4-2

(L) (R)

AREA (SQ. FT)	SIZE (INCHES)	CONN. D.O.T. #	POSTS
16.0	48	80-9918L	2
16.0	48	80-9917R	2

W6-3

AREA (SQ. FT)	SIZE (INCHES)	CONN. D.O.T. #	POSTS
16.0	48	80-9945	2

W8-W9 - SERIES

W8-1

BUMP

AREA (SQ. FT)	SIZE (INCHES)	CONN. D.O.T. #	POSTS
9.0	36	80-9901	1
16.0	48	80-9902	2

BUMP AHEAD

AREA (SQ. FT)	SIZE (INCHES)	CONN. D.O.T. #	POSTS
9.0	36	80-9801	1
16.0	48	80-9802	2

W9-2

LANE ENDS MERGE LEFT (L)
LANE ENDS MERGE RIGHT (R)

AREA (SQ. FT)	SIZE (INCHES)	CONN. D.O.T. #	POSTS
16.0	48	80-9910L	2
16.0	48	80-9911R	2

W13 - SERIES

W13-1

00 M.P.H.

SUBPLATE
VARIABLE SPEED

AREA (SQ. FT)	SIZE (INCHES)	CONN. D.O.T. #	POSTS
4.0	24	80-9569	1
6.25	30	80-9567	1

REDUCE SPEED TO 00 MPH

VARIABLE SPEED

AREA (SQ. FT)	SIZE (INCHES)	CONN. D.O.T. #	POSTS
9.0	36	80-9506	1
16.0	48	80-9508	2

SPEED LIMIT AHEAD 00 MPH

VARIABLE SPEED

AREA (SQ. FT)	SIZE (INCHES)	CONN. D.O.T. #	POSTS
12.0	72X24	80-9519	2

W20 - SERIES

W20-1

ROAD WORK AHEAD

AREA (SQ. FT)	SIZE (INCHES)	CONN. D.O.T. #	POSTS
6.25	30	80-9602	1
9.0	36	80-9603	1
16.0	48	80-9604	2

LEFT LANES CLOSED (L) RIGHT LANES CLOSED (R)

	AREA (SQ. FT)	SIZE (INCHES)	CONN. D.O.T. #	POSTS
(L)	16.0	48	80-9836	2
(R)	16.0	48	80-9839	2

W20-7a

AREA (SQ. FT)	SIZE (INCHES)	CONN. D.O.T. #	POSTS
9.0	36	80-9803	1
16.0	48	80-9804	2

W20-1

ROAD WORK 0000 FT

VARIABLE DISTANCE

AREA (SQ. FT)	SIZE (INCHES)	CONN. D.O.T. #	POSTS
9.0	36	80-9614	1
16.0	48	80-9615	2

LEFT TWO LANES CLOSED AHEAD (L) RIGHT TWO LANES CLOSED AHEAD (R)

	AREA (SQ. FT)	SIZE (INCHES)	CONN. D.O.T. #	POSTS
(L)	16.0	48	80-9837	2
(R)	16.0	48	80-9838	2

SLOW MOVING TRUCKS AHEAD

AREA (SQ. FT)	SIZE (INCHES)	CONN. D.O.T. #	POSTS
32.0	96X48	80-9815	2B

W20-2

DETOUR 1000 FT

AREA (SQ. FT)	SIZE (INCHES)	CONN. D.O.T. #	POSTS
9.0	36	80-9805	1
16.0	48	80-9806	2

LEFT LANE CLOSED AHEAD (L) RIGHT LANE CLOSED AHEAD (R)

	AREA (SQ. FT)	SIZE (INCHES)	CONN. D.O.T. #	POSTS
(L)	16.0	48	80-9847	2
(R)	16.0	48	80-9848	2

AHEAD

AREA (SQ. FT)	SIZE (INCHES)	CONN. D.O.T. #	POSTS
2.0	24X12	80-9870	
3.75	30X18	80-9871	

W20-4

ONE LANE ROAD AHEAD

AREA (SQ. FT)	SIZE (INCHES)	CONN. D.O.T. #	POSTS
9.0	36	80-9834	1
16.0	48	80-9835	2

LEFT LANE CLOSED (L) RIGHT LANE CLOSED (R)

	AREA (SQ. FT)	SIZE (INCHES)	CONN. D.O.T. #	POSTS
(L)	16.0	48	80-9846	2
(R)	16.0	48	80-9849	2

1 MILE

VARIABLE MILEAGE

AREA (SQ. FT)	SIZE (INCHES)	CONN. D.O.T. #	POSTS
2.5	30X12	80-9872	
4.5	36X18	80-9873	

W21 - SERIES

W21-6

SURVEY CREW

AREA (SQ. FT)	SIZE (INCHES)	CONN. D.O.T. #	POSTS
9.0	36	80-9607	1

PEDESTRIAN DETOUR

AREA (SQ. FT)	SIZE (INCHES)	CONN. D.O.T. #	POSTS
2.0	24X12	80-9912	1

W22 - SERIES

W22-1

BLASTING ZONE 1000 FT

AREA (SQ. FT)	SIZE (INCHES)	CONN. D.O.T. #	POSTS
9.0	36	80-9620	1
16.0	48	80-9625	2

W22-2

TURN OFF 2-WAY RADIO AND CELL PHONE

AREA (SQ. FT)	SIZE (INCHES)	CONN. D.O.T. #	POSTS
10.5	42X36	80-9623	2

W22-3

END BLASTING ZONE

AREA (SQ. FT)	SIZE (INCHES)	CONN. D.O.T. #	POSTS
7.5	36X30	80-9622	2
10.5	42X36	80-9621	2

(VARIABLE LEGEND)

AREA (SQ. FT)	SIZE (INCHES)	CONN. D.O.T. #	POSTS
4.17	60X10	80-9913	2
12.0	96X18	80-9914	2
3.33	48X10	80-9916	2

BLANK OR VARIABLE LEGEND

AREA (SQ. FT)	SIZE (INCHES)	CONN. D.O.T. #	POSTS
9.0	36	80-9933	1
16.0	48	80-9934	2

(VARIABLE LEGEND)

AREA (SQ. FT)	SIZE (INCHES)	CONN. D.O.T. #	POSTS
12.5	60X30	80-9928	2
24.0	72X48	80-9929	2

STAY IN LINE

AREA (SQ. FT)	SIZE (INCHES)	CONN. D.O.T. #	POSTS
16.0	48	80-9951	2

USE SHOULDER

AREA (SQ. FT)	SIZE (INCHES)	CONN. D.O.T. #	POSTS
16.0	48	80-9956	2

SHOULDER CLOSED AHEAD (1) SHOULDER CLOSED (2)

	AREA (SQ. FT)	SIZE (INCHES)	CONN. D.O.T. #	POSTS
(1)	16.0	48	80-9957	2
(2)	9.0	36	80-9958	1
(2)	16.0	48	80-9959	2

STOP-SLOW PADDLE

SIDE A * STOP
SIDE B * SLOW

SIDE A
BACKGROUND - RED
COPY & BORDER - WHITE
SIDE B
BACKGROUND - ORANGE
COPY & BORDER - BLACK PLAIN

AREA (SQ. FT)	SIZE (INCHES)	CONN. D.O.T. #	POSTS
2.51	19	80-9950	PADDLE

NEW

COPY & BORDER - BLACK
BACKGROUND - YELLOW

AREA (SQ. FT)	SIZE (INCHES)	CONN. D.O.T. #	POSTS
2.0	12X24	41-0815	

NOTES:
1. R1-SERIES SIGN THE LEGEND "O.S.T.A." SHALL APPEAR.
2. POSTS - SEE STANDARD SHEET TR-1208_02 - "METAL SIGN POSTS AND SIGN MOUNTING DETAILS".
3. POSTS - TYPE A (EXCEPT WHERE NOTED WITH A "B" FOR TYPE B)
4. ALL POSTS NOTED ARE FOR LONG TERM INSTALLATION. SEE STANDARD SHEET TR-1208_02.
5. FOR TEMPORARY SUPPORTS SEE STANDARD SHEET TR-1220_02 - "CONSTRUCTION SIGN SUPPORTS AND CHANNELIZING DEVICES".
6. FOR SPECIFIC SIGN DESIGN, CONTACT CONN. D.O.T., DIVISION OF TRAFFIC ENGINEERING. FOR BOLT HOLE PATTERN REFER TO FHWA PUBLICATION "STANDARD HIGHWAY SIGNS". SIGNS OF DIFFERENT DIMENSIONS TO BE ERECTED ON THE SAME POSTS, OR SPAN/MAST ARM MOUNTED, MAY REQUIRE SPECIAL BOLT HOLE PATTERNS.
7. ALL CONSTRUCTION SIGNS TO BE PAID FOR UNDER THE CONSTRUCTION SIGNS ITEM IN THE CONTRACT.
8. MATERIALS & COLORS SHALL CONFORM TO STATE SPECIFICATIONS.

MATERIALS:
SIGNS AND THEIR PORTABLE SUPPORTS SHALL CONFORM TO THE REQUIREMENTS OF NCHRP REPORT 350 (TL-3) OR THE AASHTO MASH FOR CATEGORY 2 DEVICES. ALUMINUM THICKNESS FOR POST MOUNTED SIGNS SHALL BE .100" EXCEPT SIGN #s. 80-9815, 80-9728, 80-9519, & 51-6147 (L OR R) WHICH SHALL BE .125", PLYWOOD THICKNESS FOR POST MOUNTED SIGNS SHALL BE 1/2" EXTERIOR GRADE A-C OR BETTER. SIGN BLANKS SHALL HAVE ONE COAT OF PRIMER PAINT PRIOR TO APPLICATION OF RETROREFLECTIVE SHEETING & COPY.

COLORS:
BACKGROUND - FLUORESCENT ORANGE - EXCEPT AS NOTED.
LEGEND - BLACK - EXCEPT AS NOTED.
ALL SIGNS WITH FLUORESCENT ORANGE BACKGROUND TO USE TYPE VIII RETROREFLECTIVE SHEETING.
ALL OTHER SIGNS TO USE TYPE IV RETROREFLECTIVE SHEETING EXCEPT AS NOTED BY *.
* SIGNS TO USE TYPE IX RETROREFLECTIVE SHEETING.

REV.	DATE	REVISION DESCRIPTION
5	8-2015	UPDATED PER MUTCD AND FORM 816 JAN 2015 REVISION.
4	6-2012	REVISED NOTE #1 TO REFERENCE "O.S.T.A."
3	4-2012	REVISED NEW SIGNAL SIGN(S) TO CONFORM TO 2009 MUTCD.
2	2-2011	MINOR REVISIONS.
1	3-2010	REMOVED OBSOLETE SIGNS (50-5925, 50-5935).

THE INFORMATION, INCLUDING ESTIMATED QUANTITIES OF WORK, SHOWN ON THESE SHEETS IS BASED ON LIMITED INVESTIGATIONS BY THE STATE AND IS IN NO WAY WARRANTED TO INDICATE THE CONDITIONS OF ACTUAL QUANTITIES OF WORK WHICH WILL BE REQUIRED.

Plotted Date: 8/25/2015

NOT TO SCALE

STATE OF CONNECTICUT
DEPARTMENT OF TRANSPORTATION

Filename: CTDOT_TRAFFIC_STD.DGN Model: TR-1220_01

SUBMITTED BY: NAME/DATE/TIME:
APPROVED BY: NAME/DATE/TIME:

CTDOT STANDARD SHEET
OFFICE OF ENGINEERING

STANDARD SHEET TITLE:
SIGNS FOR CONSTRUCTION AND PERMIT OPERATIONS

STANDARD SHEET NO.:
TR-1220_01

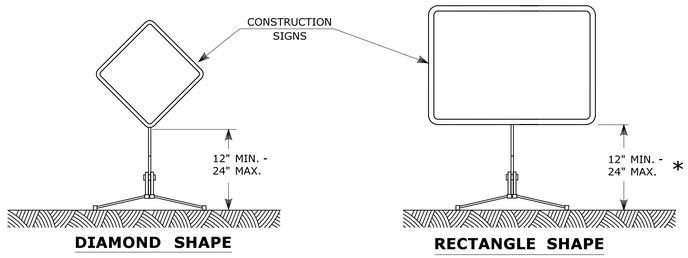

PORTABLE CONSTRUCTION SIGNS

NOTES FOR PORTABLE SIGN SUPPORTS:

1. SIGNS AND THEIR PORTABLE SUPPORTS SHALL CONFORM TO THE REQUIREMENTS OF NCHRP REPORT 350 (TL-3) OR THE AASHTO MASH FOR CATEGORY 2 DEVICES AND THE LATEST EDITION OF THE MUTCD.
2. MOUNTING HEIGHT OF SIGNS SHALL BE A MINIMUM OF 12" AND A MAXIMUM OF 24". SIGNS SHALL BE MOUNTED HIGHER AS NEEDED TO MEET FIELD CONDITIONS OR AS DIRECTED BY THE ENGINEER.
3. THE ENGINEER RESERVES THE RIGHT TO REJECT ANY SUPPORT DEEMED UNSUITABLE FOR THE PURPOSE INTENDED.
4. PORTABLE SIGN SUPPORTS SHALL BE STABILIZED IN A MANNER THAT WILL NOT AFFECT THEIR COMPLIANCE WITH NCHRP REPORT 350 (TL-3) OR THE AASHTO MASH FOR CATEGORY 2 DEVICES.
5. PORTABLE CONSTRUCTION SIGN SUPPORTS SHOULD NOT BE USED FOR DURATION OF MORE THAN 3 DAYS EXCEPT FOR R9-8 THROUGH R9-11a SERIES, R11 SERIES, W1-6 THROUGH W1-8 SERIES, M4-10, AND E5-1. SEE STANDARD SHEET TR-1220_01 - "SIGNS FOR CONSTRUCTION AND PERMIT OPERATIONS" FOR SIGN DETAILS.

* FOR E5-1 (EXIT SIGNS) USE MIN 48".

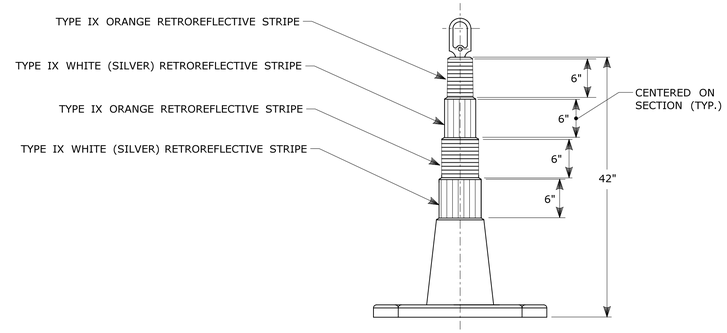

42" TRAFFIC CONE

NOTES:

1. TRAFFIC CONES SHALL CONFORM TO THE REQUIREMENTS OF NCHRP REPORT 350 (TL-3) OR THE AASHTO MASH FOR CATEGORY 1 DEVICES AND THE LATEST EDITION OF THE MUTCD.
2. IF RUBBER CONES ARE USED, THEY SHALL HAVE INTERIOR RIBS FOR RIGIDITY.
3. IF PLASTIC CONES ARE USED, THEY SHALL BE COLOR IMPREGNATED.
4. THE ENGINEER RESERVES THE RIGHT TO REJECT ANY CONE DEEMED UNSUITABLE FOR THE PURPOSE INTENDED.
5. THE ENTIRE AREA OF ORANGE AND WHITE STRIPES SHALL BE RETROREFLECTIVE SHEETING AS REQUIRED IN THE SPECIFICATIONS.
6. THE SECTIONS OF CONES NOT COVERED WITH RETROREFLECTIVE STRIPES SHALL BE ORANGE.

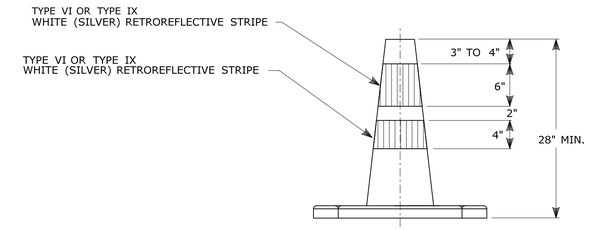

TRAFFIC CONE

NOTES:

1. TRAFFIC CONES SHALL CONFORM TO THE REQUIREMENTS OF NCHRP REPORT 350 (TL-3) OR THE AASHTO MASH FOR CATEGORY 1 DEVICES AND THE LATEST EDITION OF THE MUTCD.
2. IF RUBBER CONES ARE USED, THEY SHALL HAVE INTERIOR RIBS FOR RIGIDITY.
3. IF PLASTIC CONES ARE USED, THEY SHALL BE COLOR IMPREGNATED.
4. THE ENGINEER RESERVES THE RIGHT TO REJECT ANY CONE DEEMED UNSUITABLE FOR THE PURPOSE INTENDED.
5. TRAFFIC CONES NOT USED AT NIGHT MAY UTILIZE TYPE III SHEETING.
6. THE SECTIONS OF CONES NOT COVERED WITH RETROREFLECTIVE STRIPES SHALL BE ORANGE.

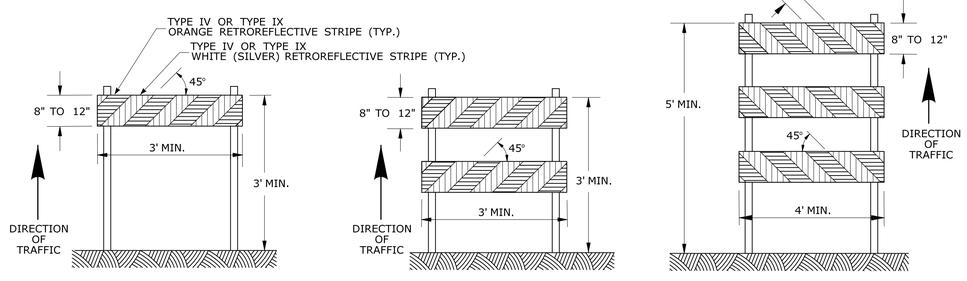

CONSTRUCTION BARRICADES

NOTES:

1. CONSTRUCTION BARRICADES SHALL CONFORM TO THE REQUIREMENTS OF NCHRP REPORT 350 (TL-3) OR THE AASHTO MASH AND THE LATEST EDITION OF THE MUTCD.
2. MARKINGS FOR BARRICADE RAILS SHALL BE ALTERNATE ORANGE AND WHITE STRIPES SLOPING DOWNWARD IN THE DIRECTION TRAFFIC IS TO PASS. 6" WIDE STRIPES SHALL BE USED.
3. THE ENTIRE AREA OF ORANGE AND WHITE STRIPES SHALL BE RETROREFLECTIVE SHEETING AS REQUIRED IN THE SPECIFICATIONS. THE SIDES OF BARRICADES FACING TRAFFIC SHALL HAVE RETROREFLECTIVE RAIL FACES.
4. THE ENGINEER RESERVES THE RIGHT TO REJECT ANY BARRICADE DEEMED UNSUITABLE FOR THE PURPOSE INTENDED.
5. CORNERS OF BARRICADE RAILS SHALL BE ROUNDED.
6. SIGNS MAY ONLY BE INSTALLED ON TYPE III BARRICADES AND SHALL BE PLACED SO AS TO COVER NO MORE THAN ONE BARRICADE RAIL.

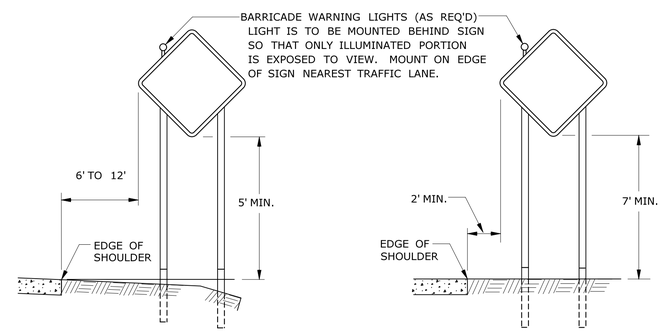

PLACEMENT OF CONSTRUCTION SIGNS
TYPICAL LONG TERM INSTALLATION

NOTES:

SUPPORTS SHALL BE METAL SIGN POSTS AND HAVE BREAK-AWAY FEATURES.

SEE TYPICAL SHEETS:
"TYPICAL SIGN SUPPORT AND SIGN PLACEMENT DETAILS-GORE EXIT SIGN"
"TYPICAL METAL SIGN POSTS AND SIGN MOUNTING DETAILS"

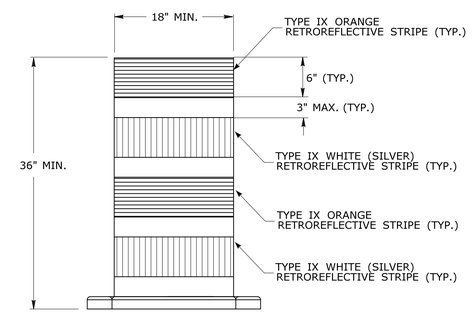

TRAFFIC DRUM
FRONT VIEW

NOTES:

1. TRAFFIC DRUM SHALL CONFORM TO THE REQUIREMENTS OF NCHRP REPORT 350 (TL-3) OR THE AASHTO MASH FOR CATEGORY 1 DEVICES AND THE LATEST EDITION OF THE MUTCD.
2. THE ENGINEER RESERVES THE RIGHT TO REJECT ANY DRUM DEEMED UNSUITABLE FOR THE PURPOSE INTENDED.
3. THE ENTIRE AREA OF ORANGE AND WHITE STRIPES SHALL BE RETROREFLECTIVE SHEETING AS REQUIRED IN THE SPECIFICATIONS.
4. THE SECTIONS OF DRUMS NOT COVERED WITH RETROREFLECTIVE STRIPES SHALL BE ORANGE.

REV.	DATE	REVISION DESCRIPTION
2	8-2015	UPDATED PER MUTCD AND FORM 816 JAN 2015 REVISION.
1	2-2011	MINOR REVISIONS.

THE INFORMATION, INCLUDING ESTIMATED QUANTITIES OF WORK, SHOWN ON THESE SHEETS IS BASED ON LIMITED INVESTIGATIONS BY THE STATE AND IS IN NO WAY WARRANTED TO INDICATE THE CONDITIONS OF ACTUAL QUANTITIES OF WORK WHICH WILL BE REQUIRED.

Plotted Date: 8/14/2015

NOT TO SCALE

STATE OF CONNECTICUT
DEPARTMENT OF TRANSPORTATION

Filename: CTDOT_TRAFFIC_STD.DGN Model: TR-1220_02

SUBMITTED BY: NAME/DATE/TIME:

APPROVED BY: NAME/DATE/TIME:

CTDOT STANDARD SHEET

OFFICE OF ENGINEERING

STANDARD SHEET TITLE:

CONSTRUCTION SIGN SUPPORTS AND CHANNELIZING DEVICES

STANDARD SHEET NO.:

TR-1220_02